HV320（V2）Series Frequency Inverter
User Manual

HNC Electric Limited

Foreword

Introduction to the Manual

HV320(V2) series drive is a high-performance general-purpose flux vector drive with a new modular design concept, it is mainly used to control and regulate the speed and torque of three-phase asynchronous motors (three-phase AC synchronous motors), and can be used for the drive of textile, paper making, wire-drawing, machine tools, packaging, food, fans, pumps, and all kinds of automated production equipment.

This Manual details the system components, parts, dimensions, and technical data of the product, and information such as mechanical installation, electrical installation, debugging and trial operation, troubleshooting, daily care and maintenance, specifications and selection of optional accessories, function codes, fault codes, etc.

Instructions for obtaining the Manual

This Manual is shipped with the product package (optional) and can be accessed electronically through Visit this Company's official website to download the information：

www.hncelectric.com

Contents

Chapter 1 Safety Information and Precautions 1

1.1 Safety precautions 1

1.2 Safety Precautions 3

Chapter 2 Product Information 6

2.1 Product Positioning and Characteristics 6

2.2 Product Model Table 7

2.3 Nameplate and model 9

Chapter 3: Introduction to Components 10

3.1 Overview 10

3.2 Overall dimensions of the complete drive and installation dimensions figure 12

Chapter 4 Technical data 17

4.1 Electrical parameters 17

4.2 Technical specification 30

4.3 Optional part 33

4.4 Selection guide for brake components 34

Chapter 5 Installation and Wiring 37

5.1 Mechanical Installation 37

5.2 Electrical Installation 38

Chapter 6 Examples of Operation and Display Application 61

6.1 Introduction to the Operation and Display Panel 61

6.2 Description of how to view and modify function codes: 62

6.3 Organization of driver function codes: 64

6.4 View status parameters 65

6.5 Start and stop control of the drive 67

Chapter 7 Function Parameters Table 76

7.1 Basic Function Parameter Table 76

7.2 Summary table of monitoring parameters 137

Chapter 8 Parameter Description 139

Group P0 Basic Function Group 139

Group P1 First motor parameters 150

Group P2 Vector control parameters 155

Group P3 V/F control parameters 163

Group P4 Input terminals 169
Group P5 Output terminals 181
Group P6 Start-stop control 186
Group P7 Keyboard and Display 192
Group P8 Auxiliary functions 196
Group P9 Fault and Protection 206
Group PA Process control PID function 215
Group Pb Swing frequency, fixed length and counting 222
PC Group Multi-segment commands and simple PLC functions 225
Group PD Communication parameters 230
PE group User-customized function codes 231
Group PP Function Code Management 234
Group H0 Torque control and limiting parameters 237
Group H1 Virtual DI input terminal, Virtual IO 239
Group H5 Control optimization parameters 247
Group H6 Analog input curve setting 249
Group H8 Point-to-Point Communication 252
Group H9 Sleep Wake-up function parameters 254
Group HA Function parameters of braking 256
Group HC Analog input and Analog output calibration 258
Group U0 Monitoring 260
Chapter 9 EMC (Electromagnetic Compatibility) 262
9.1 Definitions 262
9.2 Introduction to EMC Standards 262
9.3 EMC Guidance 262
Chapter 10 Maintenance and Troubleshooting 265
10.1 Routine care and maintenance of the drive 265
10.2 Warranty statement for the drive 266
Appendix I Modbus Communication Protocol 274
Appendix II Constant Pressure Water Supply Application Macros 284

Chapter 1 Safety Information and Precautions

1.1 Safety precautions

In this manual, safety precautions are classified into the following two categories:

Danger: Hazard caused by failure to operate as required, it may result in serious injury, or even death.

CAUTION: Hazard caused by failure to operate as required, it may result in moderate or minor injuries and damage to equipment; Users are requested to read this chapter carefully when installing, commissioning and repairing the system, and to be sure to operate in accordance with the safety precautions required by the contents of this chapter. Any injury or loss caused by violation of regulations is not related to the Company.

1.1.1 Before installation:

Danger	◆ Do not install the product or its accessories if you find any damage or corrosion when you open the box! ◆ If there is water in the control system water, parts are missing, or parts are damaged when unpacking, do not install! ◆ Do not install the product if the packing list does not match the name of the physical object!
Caution	◆ Handle the equipment gently, otherwise there is a risk of damage to the equipment! ◆ Do not use the driver with damaged or missing parts. There is a risk of injury! ◆ Do not touch the control system components with your hands, otherwise there is a risk of electrostatic damage!

1.1.2 At the time of installation:

Danger	◆ Please install the drive on a flame-retardant object such as metal; keep it away from combustible materials. Otherwise it may cause a fire alarm! ◆ Do not unscrew the fixing bolts of the equipment components, especially those marked with a red colour!
Caution	◆ Do not allow wire tips or screws to fall into the drive. Otherwise, it will cause damage to the drive! ◆ Install the drive in a location that is low in vibration and out of direct sunlight. ◆ When two or more drives are placed in the same cabinet, please pay attention to the installation position to ensure the heat dissipation effect.

1.1.3 After installation:

Danger	◆ The work must be carried out by professional electrical engineering personnel, otherwise unexpected dangers may occur! ◆ The drive and power supply must be separated by a circuit breaker, otherwise a fire alarm may occur! ◆ Make sure the power supply is in zero energy state before wiring, otherwise

	there is a risk of electric shock! ◆ Please ground in correct and standardized manner the drive in accordance with the standard, otherwise there is a risk of electric shock! ◆ Please refer to the recommendations in the manual for the wire diameter used. Otherwise, accidents may occur! ◆ Encoders must use shielded wires, and the shielding layer must ensure reliable grounding at one end!

1.1.4 Pre-power-up:

Danger	◆ Make sure that the voltage level of the input power supply is the same as the rated voltage level of the drive; that the wiring on the power supply input terminals (R, S, T) and output terminals (U, V, W) are correctly positioned; and that the peripheral circuits connected to the drive are free of short-circuits and that the connected wiring is tightened. Otherwise, the drive will be damaged! ◆ No part of the drive is required to be tested for voltage withstand, as the product has already been tested for this at the factory. Otherwise, it may cause accidents!
Caution	◆The drive must be covered with cover plate before powering up. Failure to do so may cause electric shock! ◆The wiring of all peripheral accessories must comply with the instructions in this manual and be wired correctly according to the circuit connection methods provided in this manual. Otherwise, it causes accidents!

1.1.5 After power-up:

Danger	◆ Do not open the cover plate after powering up. Otherwise, there is a danger of electric shock! ◆ Do not touch any input or output terminals of the driver. Otherwise, there is a danger of electric shock!
Caution	◆ If parameter identification is required, please pay attention to the danger of injury caused by motor rotation. Otherwise, it may cause accidents! ◆ Do not change the drive manufacturer's parameters at will. Failure to do so may cause damage to the device!

1.1.6 Running:

Danger	◆ Non-professional technicians shall not test the signals during operation. Failure to do so may cause personal injury or equipment damage! ◆ Do not touch the cooling fan or discharge resistor to test the temperature. Otherwise, it may cause burns!
Caution	◆ Avoid dropping anything into the device while the driver is in operation. Otherwise, it will cause damage to the device! ◆ Do not use the contactor on/off method to control the start/stop of the drive. Otherwise, it will cause equipment damage!

1.1.7 During maintenance:

Danger	◆ Do not repair or maintain energized equipment. Otherwise, there is a risk of electric shock! ◆ Make sure that the drive is serviced only when the drive voltage is lower than DC36V. Otherwise, the residual charge on the capacitor can cause harm to people! ◆ People without professional training do not repair or maintain the drive. Failure to do so may result in personal injury or equipment damage! ◆ Parameters must be set after replacing the drive, and all pluggable plug-in units must be plugged and unplugged with the power off!

1.2 Safety precautions

1.2.1 Motor insulation check

Motor insulation check shall be done before first use, reuse after a long period of time and periodic inspection to prevent damage to the drive due to insulation failure of the motor windings. For insulation check, it must separate the motor wires from the drive, it is recommended to use 500V voltage type megohmmeter, it shall ensure that the measured insulation resistance is not less than 200MΩ.

1.2.2 Thermal protection of the motor

If the selected motor and drive rated capacity mismatch, especially when the drive rated power is greater than the motor rated power, it must adjust the parameters related to motor protection in the driver or install a thermal relay in front of the motor to protect the motor.

1.2.3 Operation above power frequency

The maximum output frequency of this driver is 0Hz~600Hz(Optional Max.1500Hz)
. If the customer needs to operate the driver at 50Hz or higher, please consider the capacity of the mechanical device.

1.2.4 Vibration of mechanical devices

At some output frequencies, the drive may encounter mechanical resonance points of the load device, which can be avoided by setting the hopping frequency parameter in the drive.

1.2.5 Motor heat and noise

Because the output voltage of the driver is PWM wave, there are certain harmonic waves, so the temperature rise, noise and vibration of the motor will be slightly increased compared with those in power frequency operation.

1.2.6 In the case of voltage sensitive devices or capacitors that improve power factor on the output side

The output of the driver is a PWM wave. If capacitors that improve power factor or lightning protection varistors are installed on the output side, it is easy to cause drive instantaneous overcurrent or even damage to the driver. Do not use such voltage sensitive devices or capacitors.

1.2.7 Switching devices such as contactors at the driver input end and output end

If a contactor is installed between the power supply and the drive input, it is not permitted to use this contactor to control the start/stop of the drive. If it is necessary to use this contactor to start and stop the drive, the interval of using this contactor to start and stop the drive shall not be less than one hour. Frequent charging and discharging reduces the service life of the capacitors in the driver. If a switching device such as a contactor is installed between the output end and the motor, it shall be ensured that the driver is turned on and off when there is no output, otherwise it may cause damage to the module inside the driver.

1.2.8 Use outside the rated voltage value

It is not suitable to use this series of driver outside the permissible operating voltage range specified in the Manual, using this series of driver outside the permissible operating voltage range specified in the Manual may cause damage to the devices inside the driver. To use in this case, it is necessary to add a corresponding voltage raising device or voltage reducing device to transform the voltage before inputting to the driver.

1.2.9 Conversion of three-phase input to two-phase input

Do not change the three-phase drive to two-phase for use. Otherwise, it may cause the drive to malfunction or to be damaged.

1.2.10 Lightning impulse protection

This series of drive is equipped with lightning overcurrent protection device, has a certain self-protection ability for induced lightning. However, for areas with frequent lightning strikes, customers shall also install lightning protection devices at the front end of the drive.

1.2.11 Altitude and derating

In areas with an altitude of more than 1000m, the heat dissipation effect of the driver deteriorates due to thin air, and it is necessary to derate. Please contact this Company for technical advice in this case.

1.2.12 Some special uses

If the customer needs to use a method other than the recommended wiring diagrams provided in this manual, such as a common DC bus, please consult us.

1.2.13 Precautions for drive retirement

Electrolytic capacitors in the main circuit and electrolytic capacitors on the printed board may explode when being incinerated. Toxic gases are generated when plastic parts are incinerated. Please dispose of them as industrial waste.

1.2.14 Adapted motors

The standard adapted motor is a four-pole squirrel-cage asynchronous induction motor. If it is not the above motor, please make sure to select the drive according to the rated current of the motor. The cooling fan of the non-variable frequency motor is connected with the rotor shaft coaxially, and the cooling effect of the fan decreases when the rotating speed decreases, so the motor shall be equipped with a strong exhaust fan or replaced with an variable frequency motor if the motor overheats.

The drive has built-in standard parameters of the adapted motor, according to the actual situation, it is necessary to identify the motor parameters or modify the default value in order to meet the actual value as much as possible, otherwise it will affect the operating effect and protection performance.

Chapter 2 Product Information

2.1 Product Positioning and Characteristics

HV320(V2) series drive is a general-purpose high-performance flux vector drive, it is mainly used to control and regulate the speed and torque of three-phase AC asynchronous motor. It adopts high-performance vector control technology, and has low-speed and high torque output, good dynamic characteristics, very strong overload capacity, user-programmable functions and background software monitoring and communication bus functions, supports a variety of encoder types, and has rich and powerful combined functions and stable performance. It can be used for drive purpose in textile, paper making, wire drawing, machine tool, packaging, food, fan, pump and other different automatic production equipment.

Characteristics

HV320(V2) series drives adopt European modular design scheme. Unique structural design. Makes everything easy for you in the process of using!

I: Easy to install

Keyhole design;

DIN-Rail Mounting;

The spring buckle control terminal does not require a screwdriver.

II: Ease of application

Replace the control unit at will;

Multi-function terminal cards, PG cards, and bus cards can be added at will;

Adding software application macros, it is easy to debug;

Parameter copy function.

III. Simple maintenance and after-sales service

Replace the damaged units, such as OP panel, CM control unit, PM power unit, PG expansion unit, FAN at will; when PM is damaged, there is no need to replace the CM, so that it is convenient to make replacement without adjusting the parameters and control wires, greatly saving the after-sales cost and labour cost.

Figure 2-1 Product Appearance Figure

2.2 Product Model Table

See the table below for the correspondence between model and volume.

Table 2-1 Corresponding relationship between product model and volume

Product model three-phase 380V	**Product model three-phase 220V**	**Product Model Single-phase 220V**
HV320-R75G3/G4 HV320-1R5G3/G4 HV320-2R2G3/G4 HV320-004G3/G4	HV320-R40G2 HV320-R75G2 HV320-1R5G2 HV320-2R2G2	HV320-R40G1 HV320-R75G1 HV320-1R5G1 HV320-2R2G1
HV320-5R5G3/G4 HV320-7R5G3/G4	HV320-004G2	HV320-004G1
HV320-011G3/G4 HV320-015G3/G4	HV320-5R5G2 HV320-7R5G2	

HV320-018G3/G4 HV320-022G3/G4	HV320-011G2	
HV320-030G3/G4	HV320-015G2	
HV320-037G3/G4	HV320-018G2	
HV320-045G3/G4 HV320-055G3/G4 HV320-075G3/G4	HV320-022G2 HV320-030G2 HV320-037G2	
HV320-075G3/G4 HV320-093G3/G4	HV320-045G2	
HV320-110G3/G4	HV320-055G2	
HV320-132G3/G4 HV320-160G3/G4	HV320-075G2	
HV320-185G3/G4 HV320-200G3/G4 HV320-220G3/G4	HV320-093G2 HV320-110G2	
HV320-250G3/G4	HV320-132G2	
HV320-280G3/G4 HV320-315G3/G4	HV320-160G2	
HV320-355G3/G4		
HV320-400G3/G4 HV320-450G3/G4	HV320-200G2	
HV320-500G3/G4 HV320-560G3/G4 HV320-630G3/G4		
HV320-710G3/G4 HV320-800G3/G4		

2.3 Nameplate and model

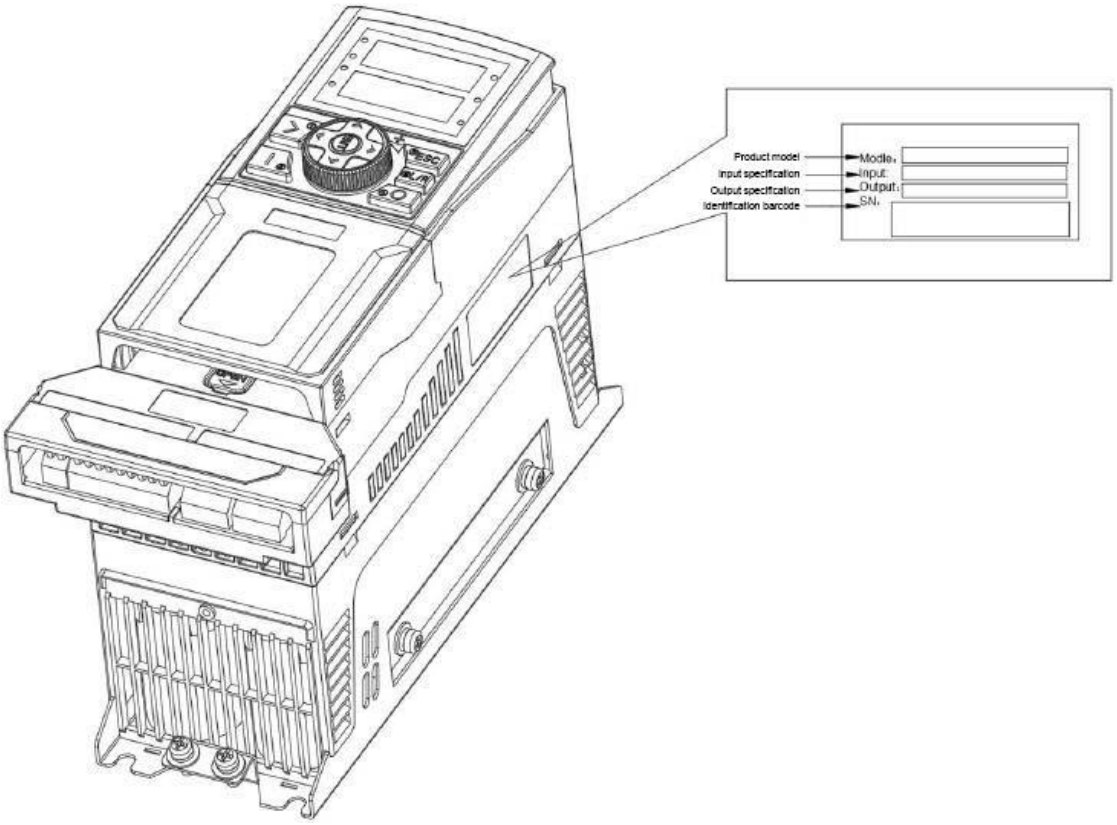

HV320 - 7R5 G 3

① ② ③ ④

① HV 320 Series Inverter

②

Code	Motor
R75	0.75kW
7R5	7.5kW
011	11kW
018	18.5kW
110	110kW
400	400kW

③

Code	Inverter Type
G	General Purpose

④

Code	Inverter Type
1	Single phase 220V
2	Three phase 220V
3	Three phase 380V-440V
4	Three phase 460V-480V

Note:
HV320S is Dedicated to PMSM motor.
HV320P is Dedicated to solar pump.
HV320WU is Dedicated to winding&unwinding.

Figure 2-2 Nameplate and Product Naming

Chapter 3: Introduction to Components

3.1 Overview

The HV320(V2) series drives are made up of a number of different functional modules, the main modules are listed below:

PM Power Modules

CM-Pro Control Module

OP-Pro Operational Display Module

EM-Pro Expansion Module (optional)

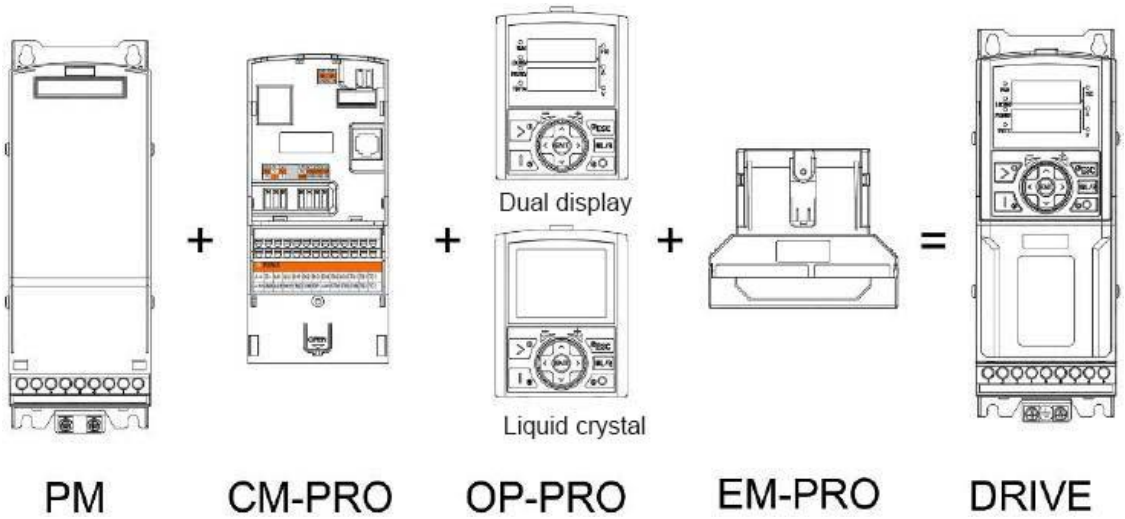

Figure 2-3 Product Modular Composition Diagram

Power Module The power modules range from 0.75kW to 800kW, adopting highly reliable IGBT and isolated drive technology, and the scientific heat dissipation design ensures safe operation under 50℃ ambient temperature.

Control Module Support synchronous or asynchronous V/F mode, open loop vector mode, closed loop vector mode and other ways to control and protect the power module and driven load motor. Standard configuration of multiple AO, IO and RS485 communication, and at the same time, reserved for expandable interfaces, convenient for customers to deal with a variety of applications.

Functional version description				
No.	Part Name	Functional version description	Function version number	Note
1	CM-Pro module	CM-Pro-01	V001	General-purpose asynchronous motor 7.5KW (including stand-alone) or less models
2		CM-Pro -02	V002	General-purpose asynchronous motor 7.5KW or above models
3		CM-Pro -03	V003	General-purpose synchronous motors up to 7.5KW

4		CM-Pro -04	V004	General-purpose synchronous motor 7.5KW or above models

The operating display module (optional) is used for commissioning, monitoring and parameter setting of the drive. For standard configuration, there are double rows of LED operation panels with extended external lead (OPT1 or OPT2 type tray is required for external lead operation panel), and LCD operating panel is optional.

Functional version description				
No.	Part Name	Functional version description	Function version number	Note
1	OP-Pro Module	HV320-LED Keypad-V2	V201	LED Double Display Panel
2		HV320-LCD Keypad-V2	V202	LCD liquid crystal with copy panel

Expansion module (optional) Connect with the expansion interface of the control module to achieve a variety of functional interface expansion, IO expansion, PG expansion, communication extensions, etc.

Functional version description				
No.	Part Name	Functional version description	Function version number	Note
1	EM-Pro Module	HV320-IO1-V2	V101	IO Function Terminal Expansion Card I
2		HV320-IO2-V2	V102	IO Function Terminal Expansion Card II
3		HV320-RS485I-V2	V103	Isolated 485 Communication Expansion Card
4		HV320-CAN-V2	V104	CANLink Bus Expansion Card
5		HV320-PNET-V2	V105	Profinet fieldbus adapter
6		HV320-ECAT-V2	V106	EtherCAT fieldbus adapter
7		HV320-DP-V2	V107	Profibus DP bus adapter
8		HV320-EIP-V2	V108	Ethernet/IP bus adapter
9		HV320-MTCP-V2	V109	Modbus TCP bus adapter
5		HV320-PG-DIF-V2	V110	Differential Encoder PG Card
6		HV320-PG-RB-V2	V111	1 Pair Pole Rotary Encoder PG Card

3.2 Overall dimensions of the complete drive and installation dimensions figure

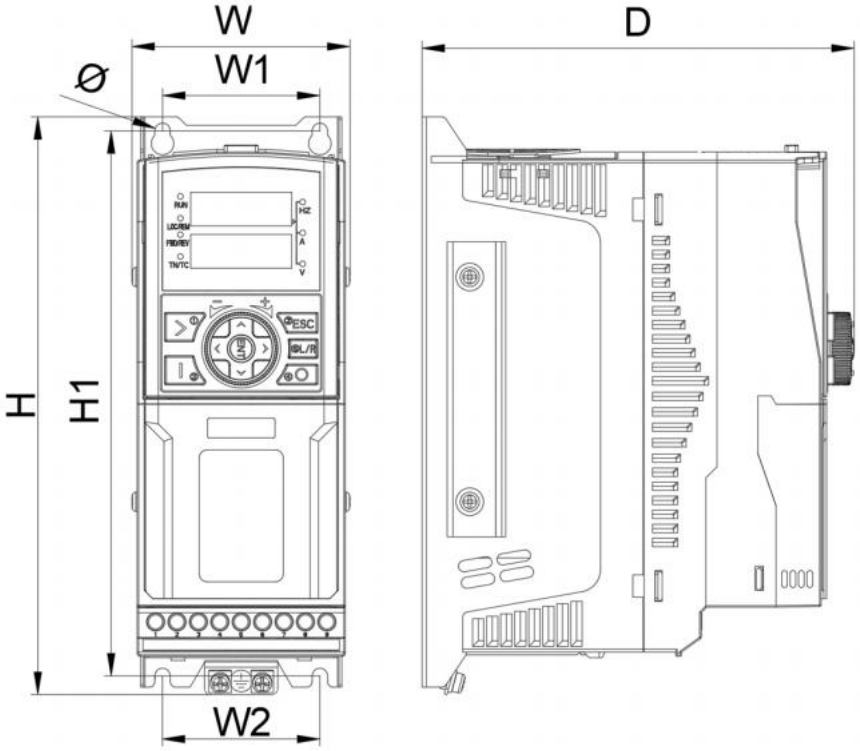

Unit:mm

Drive Model	Installation Dimensions			Overall Dimensions			Installation Hole Diameter
	W1	**W2**	**H1**	**W**	**H**	**D**	**Φ**
HV320-R75G3/4	56	56	194	78	206	154	5.0
HV320-1R5G3/4							
HV320-2R2G3/4							
HV320-004G3/4							
HV320-R40G2							
HV320-R75G2							
HV320-1R5G2							
HV320-2R2G2							
HV320-R40G1							
HV320-R75G1							
HV320-1R5G1							
HV320-2R2G1							
HV320-5R5G3/4	68	68	219	93	235	154	5.0
HV320-7R5G3/4							
HV320-004G2							
HV320-004G1							

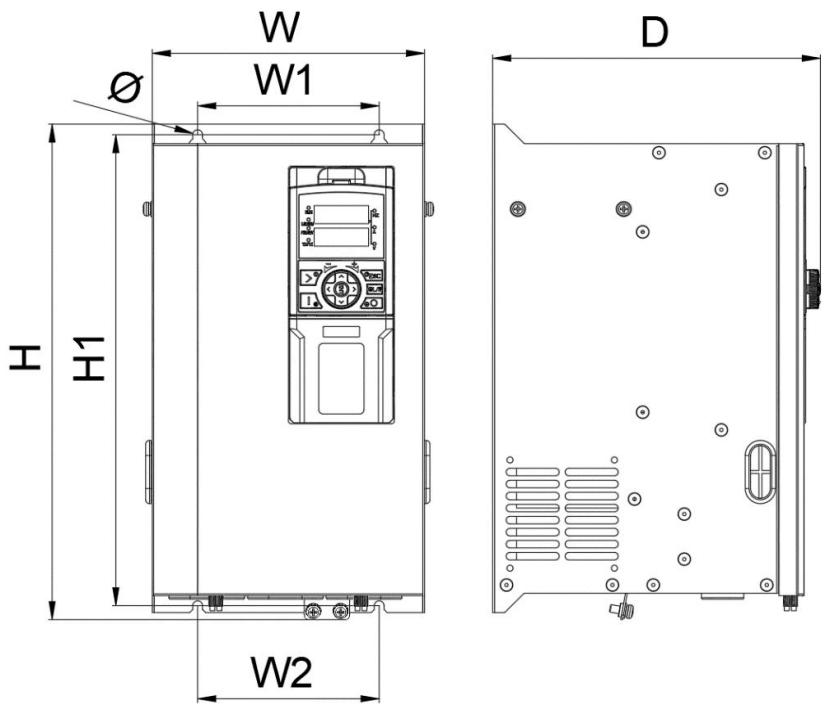

Unit: mm

Drive Model	Installation Dimensions			Overall Dimensions			Installation Hole Diameter
	W1	**W2**	**H1**	**W**	**H**	**D**	**Φ**
HV320-011G3/4	100	100	265	142	283	195	6.5
HV320-015G3/4							
HV320-5R5G2							
HV320-7R5G2							
HV320-018G3/4	120	120	289	150	305	210	6.5
HV320-022G3/4							
HV320-011G2							
HV320-030G3/4	120	120	314	180	330	217	6.5
HV320-015G2							
HV320-037G3/4	160	160	407	240	418	248	6.5
HV320-018G2							
HV320-045G3/4	220	220	484	307	500	255	10
HV320-055G3/4							
HV320-075G3/4							
HV320-022G2							
HV320-030G2							
HV320-037G2							
HV320-075G3/4	220	220	612	307	650	270	10
HV320-093G3/4							
HV320-045G2							

HV320-110G3/4	220	220	639	317	680	320	10
HV320-055G2							
HV320-132G3/4	300	300	681	425	720	326	12
HV320-160G3/4							
HV320-075G2							
HV320-185G3/4	200	130	885	335	946	537	12
HV320-200G3/4							
HV320-220G3/4							
HV320-093G2							
HV320-110G2							
HV320-250G3/4	200	130	925	340	986	585	13
HV320-132G2							
HV320-280G3/4	200	130	1085	340	1140	585	13
HV320-315G3/4							
HV320-160G2							
HV320-355G3/4	300	300	1330	748	1360	420	13
HV320-400G3/4							
HV320-450G3/4							
HV320-200G2							
HV320-220G2							
HV320-500G3/4	350	350	1365	900	1400	510	16
HV320-560G3/4							
HV320-630G3/4							
HV320-710G3/4				1200	1800	500	
HV320-800G3/4							

Overall dimensions drawing of the whole machine with base:

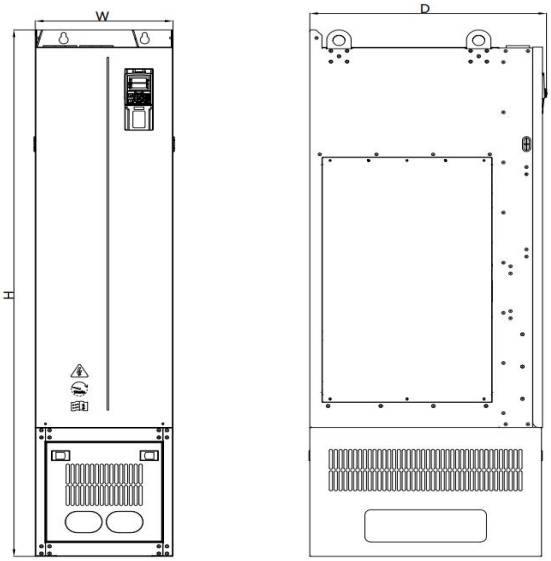

Model	External dimension (mm)		
	W	H	D
HV320-110G3/4	317	1040	320
HV320-055G2			
HV320-132G3/4	425	1065	326
HV320-160G3/4			
HV320-075G2			
HV320-185G3/4	335	1310	537
HV320-200G3/4			
HV320-220G3/4			
HV320-090G2			
HV320-110G2			
HV320-250G3/4	340	1350	585
HV320-132G2			
HV320-280G3/4	340	1470	585
HV320-315G3/4			
HV320-160G2			
HV320-500G3/4	900	1756	510
HV320-560G3/4			
HV320-630G3/4			

HV320-KPHouse-V2

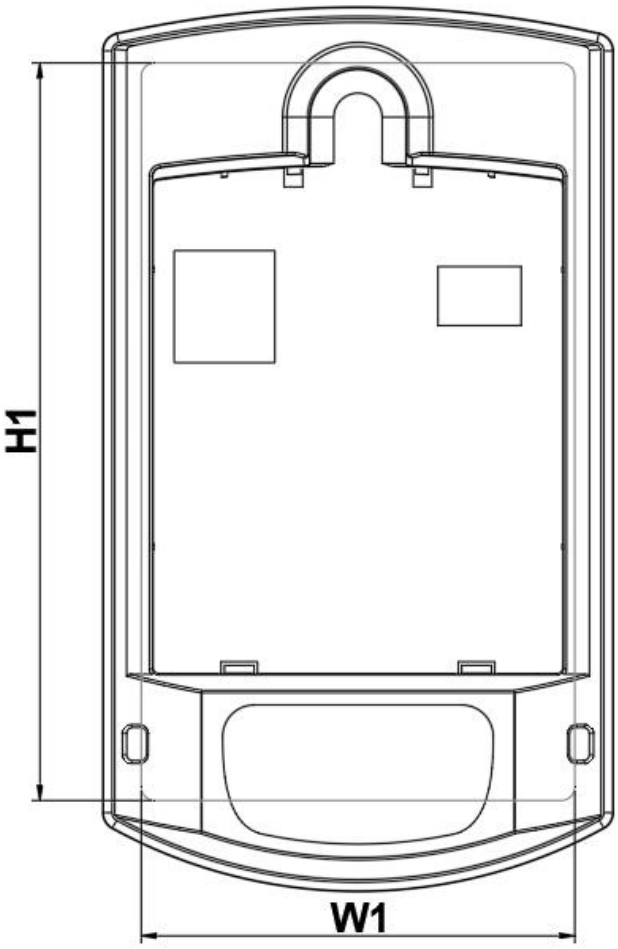

Unit: mm

Model	Mounting Hole Size	
	W1	H1
HV320-KPHouse-V2	73.5	125.5

Chapter 4 Technical data

4.1 Electrical parameters

G1 input voltage range: Single-phase AC220V±15%, 50 / 60 Hz

Item		Specification				
Power (kW)		0.4	0.75	1.5	2.2	4.0
Volume		A1				A2
Output	Adapted Motor capacity (KW)	0.4	0.75	1.5	2.2	4.0
	Rated output current (A)	2.3	4	7	9.6	17
	Output Voltage (V)	Three-phase 0~ input voltage				
	Maximum Output Frequency	600Hz (can be changed by parameter)				
	Carrier frequency	0.5KHz~16.0kHz				
	Overload capacity	150% of rated current, 60s				
Input	Rated input current (A)	5.4	8.2	14	23	32
	Rated voltage, rated frequency	AC: Single phase 220V, 50/60Hz				
	Allowable voltage fluctuation range	Single-phase AC220V±15%, 50 / 60 Hz				
	Allowable frequency fluctuation range	-5%~5%, actual allowable range: 47.5Hz~63Hz				
	Power supply capacity (KVA)	1.4	2.2	3.7	6.0	10
Protection class		IP20 (IP protection level applicable to IEC products)				

G2 input voltage range: Three-phase AC220V±15%, 50 / 60 Hz

Item		Specification				
Power (kW)		0.4	0.75	1.5	2.2	4.0
Volume		A1				A2
Output	Adapted Motor capacity (KW)	0.4	0.75	1.5	2.2	4.0
	Rated output current (A)	2.1	3.8	7.2	9.0	17
	Output Voltage (V)	Three-phase 0~ input voltage				
	Maximum Output Frequency	600HZ (can be changed by parameter)				
	Carrier frequency	0.5KHz~16.0kHz				
	Overload capacity	150% of rated current, 60s				
Input	Rated input current (A)	2.4	4.6	9	11.4	16.7
	Rated voltage, rated frequency	AC: Three-phase 220V, 50/60Hz				
	Allowable voltage fluctuation range	Three-phase AC220V±15%, 50 / 60 Hz				
	Allowable frequency fluctuation range	-5%~5%, actual allowable range: 47.5Hz~63Hz				
	Power supply capacity (KVA)	1.1	2.1	4.2	5.3	7.7
Protection class		IP20 (IP protection level applicable to IEC products)				

Item		Specification		
Power (kW)		5.5	7.5	11
Volume		A3		A4
Output	Adapted Motor capacity (KW)	5.5	7.5	11
	Rated output current (A)	25	32	45
	Output Voltage (V)	Three-phase 0~ input voltage		
	Maximum Output Frequency	600HZ (can be changed by parameter)		
	Carrier frequency	0.5KHz~16.0kHz		
	Overload capacity	150% of rated current, 60s		
Input	Rated input current (A)	32	41	49
	Rated voltage, rated frequency	AC: Three-phase 220V, 50/60Hz		
	Allowable voltage fluctuation range	Three-phase AC220V±15%, 50 / 60 Hz		
	Allowable frequency fluctuation range	-5%~5%, actual allowable range: 47.5Hz~63Hz		
	Power supply capacity (KVA)	14.8	18.9	27
Protection class		IP20 (IP protection level applicable to IEC products)		

Item		Specification		
Power (kW)		15	18	22
Volume		A5	A6	A7
Output	Adapted Motor capacity (KW)	15	18	22
	Rated output current (A)	60	75	91
	Output Voltage (V)	Three-phase 0~ input voltage		
	Maximum Output Frequency	600HZ (can be changed by parameter)		
	Carrier frequency	0.5KHz~16.0kHz		
	Overload capacity	150% of rated current, 60s		
Input	Rated input current (A)	57	69	89
	Rated voltage, rated frequency	AC: Three-phase 220V, 50/60Hz		
	Allowable voltage fluctuation range	Three-phase AC220V±15%, 50 / 60 Hz		
	Allowable frequency fluctuation range	-5%~5%, actual allowable range: 47.5Hz~63Hz		
	Power supply capacity (KVA)	31.6	41	51
Protection class		IP20 (IP protection level applicable to IEC products)		

Item		Specification			
Power (kW)		30	37	45	55
Volume		A7		A8	A9
Output	Adapted Motor capacity (KW)	30	37	45	55
	Rated output current (A)	112	150	176	210
	Output Voltage (V)	Three-phase 0~ input voltage			
	Maximum Output Frequency	600Hz (can be changed by parameter)			
	Carrier frequency	0.5KHz~16.0kHz			
	Overload capacity	150% of rated current, 60s			
Input	Rated input current (A)	106	139	164	196
	Rated voltage, rated frequency	AC: Three-phase 220V, 50/60Hz			
	Allowable voltage fluctuation range	Three-phase AC220V±15%, 50 / 60 Hz			
	Allowable frequency fluctuation range	-5%~5%, actual allowable range: 47.5Hz~63Hz			
	Power supply capacity (KVA)	64	87	102	117
Protection class		IP20 (IP protection level applicable to IEC products)			

Item		Specification		
Power (kW)		75	90	110
Volume		A10	A11	
Output	Adapted Motor capacity (KW)	75	90	110
	Rated output current (A)	304	380	426
	Output Voltage (V)	Three-phase 0~ input voltage		
	Maximum Output Frequency	600HZ (can be changed by parameter)		
	Carrier frequency	0.5KHz~16.0kHz		
	Overload capacity	150% of rated current, 60s		
Input	Rated input current (A)	307	385	430
	Rated voltage, rated frequency	AC: Three-phase 220V, 50/60Hz		
	Allowable voltage fluctuation range	Three-phase AC220V±15%, 50 / 60 Hz		
	Allowable frequency fluctuation range	-5%~5%, actual allowable range: 47.5Hz~63Hz		
	Power supply capacity (KVA)	184	202	226
Protection class		IP20 (IP protection level applicable to IEC products)		

Item		Specification			
Power (kW)		132	160	200	220
Volume		A12	A13	A15	
Output	Adapted Motor capacity (KW)	132	160	200	220
	Rated output current (A)	465	585	725	820
	Output Voltage (V)	Three-phase 0~ input voltage			
	Maximum Output Frequency	600Hz (can be changed by parameter)			
	Carrier frequency	0.5KHz~16.0kHz			
	Overload capacity	150% of rated current, 60s			
Input	Rated input current (A)	468	590	714	810
	Rated voltage, rated frequency	AC: Three-phase 220V, 50/60Hz			
	Allowable voltage fluctuation range	Three-phase AC220V±15%, 50 / 60 Hz			
	Allowable frequency fluctuation range	-5%~5%, actual allowable range: 47.5Hz~63Hz			
	Power supply capacity (KVA)	246	310	413	464
Protection class		IP20 (IP protection level applicable to IEC products)			

G3 input voltage range: Three-phase AC 380~440 (-15%~+10%), 50 / 60 Hz

G4 input voltage range: Three-phase AC 460~480 (-15%~+10%), 50 / 60 Hz

Item		Specification				
Power (KW)		0.7	1.5	2.2	4.0	5.5
Volume		A1			A2	
Output	Adapted Motor capacity (KW)	0.7	1.5	2.2	4.0	5.5
	Rated output current (A)	2. 1	3.8	5. 1	9.0	13.0
	Output Voltage (V)	Three-phase 0~ input voltage				
	Maximum Output Frequency	600Hz (can be changed by parameter)				
	Carrier frequency	0.5Hz~16.0kHz				
	Overload capacity	150% of rated current, 60s				
Input	Rated input current (A)	3.4	5.0	5.8	10.5	14.6
	Rated voltage, rated frequency	AC: Three-phase 380V~440V, 50/60Hz AC: Three-phase 440V~480V, 50/60Hz				
	Allowable voltage fluctuation range	AC 380~440 (-15%~+10%) AC 440~480 (-15%~+10%)				
	Allowable frequency fluctuation range	-5%~5%, actual permissible range: 47.5Hz~63Hz				
	Power supply capacity (KVA)	1.5	3.0	4.0	5.9	8.9
Protection class		IP20 (IP protection level applicable to IEC products)				

Item		Specification			
Power (KW)		7.5	11	15	18.5
Volume		A3		A4	
Output	Adapted Motor capacity (KW)	7.5	11	15	18.5
	Rated output current (A)	17	25	32	37
	Output Voltage (V)	Three-phase 0~input voltage			
	Maximum Output Frequency	600Hz (can be changed by parameter)			
	Carrier frequency	0.5Hz~16.0kHz			
	Overload capacity	150% of rated current, 60s			
Input	Rated Input Current (A)	20.5	26.0	35.0	38.5
	Rated voltage, rated frequency	AC: Three-phase 380V~440V, 50/60Hz AC: Three-phase 440V~480V, 50/60Hz			
	Allowable voltage fluctuation range	AC 380~440 (-15%~+10%) AC 440~480 (-15%~+10%)			
	Allowable frequency fluctuation range	-5%~5%, actual permissible range: 47.5Hz~63Hz			
	Power Capacity (KVA)	11.0	14	19	21
Protection class		IP20 (IP protection level applicable to IEC products)			

Item		Specification		
Power (KW)		22	30	37
Volume		A5	A6	
Output	Adapted Motor capacity (KW)	22	30	37
	Rated output current (A)	45	60	75
	Output Voltage (V)	Three-phase 0~input voltage		
	Maximum Output Frequency	600Hz (can be changed by parameter)		
	Carrier frequency	0.5Hz~16.0kHz		
	Overload capacity	150% of rated current, 60s		
Input	Rated Input Current (A)	46.5	62.0	76.0
	Rated voltage, rated frequency	AC: Three-phase 380V~440V, 50/60Hz AC: Three-phase 440V~480V, 50/60Hz		
	Allowable voltage fluctuation range	AC 380~440 (-15%~+10%) AC 440~480 (-15%~+10%)		
	Allowable frequency fluctuation range	-5%~5%, actual permissible range: 47.5Hz~63Hz		
	Power supply capacity (KVA)	24	33	40
Protection class		IP20 (IP protection level applicable to IEC products)		

Item		Specification						
Power (KW)		45	55	75	90	110	132	160
Volume		A7		A8		A9	A10	
Output	Adapted Motor capacity (KW)	45	55	75	90	110	132	160
	Rated output current (A)	91	112	150	176	210	253	304
	Output Voltage (V)	Three-phase 0~input voltage						
	Maximum Output Frequency	600Hz (can be changed by parameter)						
	Carrier frequency	0.5Hz~16.0kHz						
	Overload capacity	150% of rated current, 60s						
Input	Rated input current (A)	92	113.0	157	180	214	256	307
	Rated voltage, rated frequency	AC: Three-phase 380V~440V, 50/60Hz AC: Three-phase 440V~480V, 50/60Hz						
	Allowable voltage fluctuation range	AC 380~440 (-15%~+10%) AC 440~480 (-15%~+10%)						
	Allowable frequency fluctuation range	-5%~5%, actual permissible range: 47.5Hz~63Hz						
	Power supply capacity (KVA)	48	59	82	95	112	134	161
	Protection class	IP20 (IP protection level applicable to IEC products)						

Item		Specification					
Power (KW)		185	200	220	250	280	315
Volume		A11			A12	A13	
Output	Adapted Motor capacity (KW)	185	200	220	250	280	315
	Rated output current (A)	340	377	426	465	520	585
	Output Voltage (V)	Three-phase 0~input voltage					
	Maximum Output Frequency	600HZ (can be changed by parameter)					
	Carrier frequency	0.5Hz~16.0kHz					
	Overload capacity	150% of rated current, 60s					
Input	Rated Input Current (A)	350	385	430	468	525	590
	Rated voltage, rated frequency	AC: Three-phase 380V~440V, 50/60Hz AC: Three-phase 440V~480V, 50/60Hz					
	Allowable voltage fluctuation range	AC 380~440 (-15%~+10%) AC 440~480 (-15%~+10%)					
	Allowable frequency fluctuation range	-5%~5%, actual permissible range: 47.5Hz~63Hz					
	Power Capacity (KVA)	184	202	226	246	276	310
Protection class		IP20 (IP protection level applicable to IEC products)					

Item		Specification							
Power (KW)		355	400	450	500	560	630	710	800
Volume		A14	A15		A16			A17	
Output	Adapted Motor capacity (KW)	355	400	450	500	560	630	710	800
	Rated output current (A)	650	725	800	860	950	1140	1300	1500
	Output Voltage (V)	Three-phase 0~input voltage							
	Maximum Output Frequency	600Hz (can be changed by parameter)							
	Carrier frequency	0.5HZ~16.0kHz							
	Overload capacity	150% of rated current, 60s							
Input	Rated Input Current (A)	665	714	830	900	960	1140	1315	1525
	Rated voltage, rated frequency	AC: Three-phase 380V~440V, 50/60Hz AC: Three-phase 440V~480V, 50/60Hz							
	Allowable voltage fluctuation range	AC 380~440 (-15%~+10%) AC 440~480 (-15%~+10%)							
	Allowable frequency fluctuation range	-5%~5%, actual permissible range: 47.5Hz~63Hz							
	Power Capacity (KVA)	345	413	464	500	526	600	692	802
Protection class		IP20 (IP protection level applicable to IEC products)							

4.2 Technical specification

Driver technical specification

Item		Specification
Basic Functions	Maximum frequency	Vector control: 0 ~ 600 Hz; V/F control: 0 ~ 600 Hz (Optional Max.1500Hz)
	Carrier frequency	0.5kHz~16kHz The carrier frequency can be automatically adjusted according to the load characteristics.
	Input frequency resolution	Digital setting: 0.01Hz Analog setting: Maximum frequency × 0.025%
	Control method	Vector Control without speed sensor (SVC) Vector control with speed sensor (FVC) V/F control
	Starting torque	0.5Hz/150% (SVC); 0Hz/180% (FVC)
	Speed adjustment range	1:100 (SVC) 1:1000 (FVC)
	Speed stabilization accuracy	±0.5% (SVC) ±0.02% (FVC)
	Torque control accuracy	±5% (FVC)
	Overload capacity	150% of rated current, 60S 180% of rated current, 3S
	Torque Increase	Automatic torque increase; manual torque increase 0.1%~30.0%
	V/F curve	Three types: Linear; Multi-point; N-square V/F curve (1.2x, 1.4x, 1.6x, 1.8x, 2x)
	V/F separation	2 ways: full separation, half separation
	Acceleration and deceleration curves	Linear or S-curve acceleration and deceleration mode. Four kinds of acceleration and deceleration time, acceleration and deceleration time range 0.0~6500.0s
	DC Brake	DC braking frequency: 0.00Hz~maximum frequency Braking time: 0.0s~36.0s Braking action current value: 0.0%~100.0%
	Jog control	Jog frequency range: 0.00Hz~50.00Hz. Jog acceleration and deceleration time 0.0s~6500.0s.
	Simple PLC/Multi-stage speed running	Up to 16-speed running via built-in PLC or control terminals
	Built-in PID	Closed-loop process control systems can be easily realized
	Automatic voltage regulation (AVR)	Automatically keep the output voltage constant when the grid voltage changes

	Overvoltage and overcurrent stall control	Automatic limitation of current and voltage during operation to prevent frequent over-current and over-voltage tripping.
	Fast current limiting function	Minimizes overcurrent faults and protects the drive from normal operation
	Torque limiting and control	"Digger" feature, automatic torque limitation during operation to prevent frequent overcurrent trips; closed-loop vector mode for torque control
Running personalized functions	Outstanding performance	Asynchronous and synchronous motor control with high-performance current vector control technology
	When there is an instantaneous power outage, the machine does not stop	Maintains drive operation for a short period of time by feeding energy back to the load in the event of a transient power failure.
	Fast current limiting	Avoid frequent overcurrent faults in drives
	Virtual IO	Five virtual DI/DOs for simple logic control.
	Time control	Timing control function: L setting time range 0.0Min~6500.0Min
	Multi-motor switching	Two sets of motor parameters, can achieve four motor switching control
	Motor overheating protection	Optional motor overheating expansion card accepts motor temperature sensor inputs
	Multi-Encoder Support	Supports differential, open collector and other encoders
	Command source	The command is given from the operation panel, from the control terminal, or from the serial communication port. Command source can be switched in various ways.
	Frequency source	10 types of frequency sources: digital give and take, Analog voltage give and take, Analog current give and take, pulse give and take, serial port give and take. Switchable in various ways
	Auxiliary frequency sources	10 kinds of auxiliary frequency sources. Flexible realization of auxiliary frequency trimming, frequency synthesis
	STO function	Two-way STO (safe Torque Off) function, so that the system has a high degree of security and reliability.
	Input terminal	Standard: 6 digital input terminals (DI1~DI6), HDI5 supports high-speed pulse input up to 100kHz. 2 analog input terminals (AI1~AI2, AI1 only supports 0~10V ;AI2 supports 0~10V/4~20mA Safety function (STO) interface (STO1, STO2)

	Output terminal	Standard: 1 digital output terminal (DO1) 2 relay output terminals (TA1-TB1-TC1, TB2-TC2) 1 analog output terminal (AO1), supports 0~10V/0~20mA
Control	RS485 communication terminal	RS485 communication interface, and supports Modbus-RTU slave communication protocol.
Display and Keypad Operation	LED display	Monitor drive status parameters
	Key lock and function selection	Partial or full locking of keys, defining the scope of action of some keys to prevent misoperation.
	Protective function	Motor short circuit detection, input/output phase loss protection, over-current protection, over-voltage protection, under-voltage protection, over-heat protection, overload protection, etc.
	Optional accessories	Brake Components, IO Expansion Cards, Communication Expansion Cards, PG Expansion Cards， LCD keypad
Environmentally friendly	Location	Indoors, out of direct sunlight, free from dust, corrosive gases, flammable gases, oil mist, water vapour, dripping water or salt, etc.
	Altitude	Below 1000m
	Environmental temperature	-10℃~+40℃ (ambient temperature at 40℃~50℃, please use with reduced rating)
	Humidity	Less than 95% RH, no water droplet condensation
	Vibration	Less than 5.9 m/(s^2) (0.6g)
	Storage temperature	-20℃~＋60℃

4.3 Optional part

If the following optional parts are required, they must be specified at the time of ordering

Name	Model	Function	Note
Built-in braking unit	Product number followed by "B"	G1/G2 models, 15kw and below built-in braking unit; G3/G4 models, 30kw and below built-in braking unit.	
External braking unit	Braking unit	The regenerative power in the braking process will be consumed through the resistor, and at the same time, it will play the role of braking.	
I/O Expansion Card	HV320-IO1-V2	1 AO output (AO2), two DI inputs (DI7, DI8), 1 high-speed pulse output, 1 relay output	
	HV320-IO2-V2	2 DI inputs (DI7, DI8), 2 relay outputs	
Bus communication card	HV320-RS485I-V2	External isolated 485 communication, standard Modbus RTU	
	HV320-CAN-V2	CANLink bus expansion card, master-slave CAN communication, supports master-slave synchronization between devices	
	HV320-PNET-V2	Profinet fieldbus adapters	
	HV320-ECAT-V2	EtherCAT Fieldbus Adapters	
	HV320-DP-V2	Profibus DP bus adapters	
	HV320-EIP-V2	Ethernet/IP bus adapter	
	HV320-MTCP-V2	Modbus TCP bus adapter	
PG Card	HV320-PG-DIF-V2	Differential encoder interface card for 5V/15V power supplies	
	HV320-PG-RB-V2	Rotary Encoder Interface Cards, Supports PT100/PT1000	
Operation panel	HV320-LCD Keypad-V2	LCD liquid crystal display, support copy function	

4.4 Selection guide for brake components

Users can choose different resistance value and power according to the actual situation, (but the resistance value must not be smaller than the recommended value in the table, and the power can be larger) The selection of braking resistor needs to be determined according to the power of the motor generating power in the actual application system, and the inertia of the system, the deceleration time, and the energy of the potential energy load are all related to each other, so customers need to choose according to the actual situation. The larger the inertia of the system, the shorter the deceleration time and the more frequent the braking, the larger the power and the smaller the resistance value of the braking resistor shall be selected.

4.1.1 Selection of resistance value

During braking, almost all of the regenerative energy of the motor is consumed in the braking resistor.

Can be based on the formula: U*U/R=Pb

Where, U ----- Braking voltage of system stable braking

(Different systems are not the same, for 380VAC system generally take 700V)

Pb----- Braking power

2.9.2 Power selection of the braking resistor

Theoretically the power of the braking resistor is the same as the braking power, but considering the derating is 70%.

Can be based on the formula: 0.7*Pr=Pb*D

Pr----- power of the resistor

D----- Braking frequency (proportion of the regeneration process to the entire operating process)

Lifts ------ 20%~30%

Unwind and take-up ----- 20~30%

Centrifuge -------- 50%~60%

Occasional braking load ------5%

Generally, 10%

Drive Model	Recommended power of braking resistor	Recommended Resistance Value of Braking Resistor	Braking unit	Note
HV320-R70G3/4	150W	≥300Ω	Standard built-in	
HV320-1R5G3/4	150W	≥220Ω		
HV320-2R2G3/4	250W	≥200Ω		
HV320-004G3/4	300W	≥130Ω		
HV320-5R5G3/4	400W	≥90Ω		
HV320-7R5G3/4	500W	≥65Ω		
HV320-011G3/4	800W	≥43Ω		
HV320-015G3/4	1000W	≥32Ω		
HV320-018G3/4	1300W	≥25Ω		
HV320-022G3/4	1500W	≥22Ω		
HV320-030G3/4	2500W	≥16Ω		
HV320-037G3/G4	3.7kW	≥16Ω	External	
HV320-045G3/G4	4.5kW	≥16Ω		
HV320-055G3/G4	5.5kW	≥8Ω		
HV320-075G3/G4	7.5kW	≥8Ω		
HV320-093G3/G4	4.5kW*2	≥8Ω*2		
HV320-110G3/G4	5.5kW*2	≥8Ω*2		
HV320-132G3/G4	6.5kW*2	≥8Ω*2		
HV320-160G3/G4	16kW	≥2.5Ω		
HV320-185G3/G4	20kW	≥2.5Ω		
HV320-200G3/G4	20kW	≥2.5Ω		
HV320-220G3/G4	22kW	≥2.5Ω		
HV320-250G3/G4	12.5kW*2	≥2.5Ω*2		
HV320-280G3/G4	14KW*2	≥2.5Ω*2		
HV320-315G3/G4	16KW*2	≥2.5Ω*2		
HV320-355G3/G4	17KW*2	≥2.5Ω*2		
HV320-400G3/G4	14KW*3	≥2.5Ω*3		
HV320-450G3/G4	15KW*3	≥2.5Ω*3		
HV320-500G3/G4	17KW*3	≥2.5Ω*3		
HV320-560G3/G4	20KW*3	≥2.5Ω*3		
HV320-630G3/G4	25KW*3	≥2.5Ω*3		

HV320-R40G1	80W	≥200Ω	Standard built-in	
HV320-R75G1	80W	≥150Ω		
HV320-1R5G1	100W	≥100Ω		
HV320-2R2G1	100W	≥70Ω		
HV320-004G1	500W	≥65Ω	Standard built-in	
HV320-R40G2	90W	≥300Ω		
HV320-R75G2	160W	≥170Ω		
HV320-1R5G2	340W	≥80Ω		
HV320-2R2G2	500W	≥55Ω		
HV320-004G2	800W	≥33Ω		
HV320-5R5G2	1300W	≥22Ω		
HV320-7R5G2	1700W	≥16Ω		
HV320-011G2	2300W	≥12Ω		
HV320-015G2	3000W	≥9Ω		
HV320-018G2	3900W	≥7Ω	External	
HV320-022G2	4600W	≥6Ω		
HV320-030G2	5500W	≥5Ω		
HV320-037G2	6800W	≥4Ω		
HV320-045G2	5000W	≥5.4Ω		
HV320-055G2	6000W	≥4.4Ω		
HV320-075G2	9kW	≥2.5Ω		
HV320-093G2	12.5kW	≥2.5Ω		
HV320-110G2	15kW	≥2.5Ω		
HV320-132G2	12.5kW*2	≥2.5Ω*2		
HV320-160G2	14KW*2	≥2.5Ω*2		
HV320-200G2	15KW*2	≥2.5Ω*2		
HV320-220G2	17KW*2	≥2.5Ω*2		

Chapter 5 Installation and Wiring

5.1 Mechanical Installation

5.1.1 Installation environment:

1. Ambient temperature: the surrounding environmental temperature has a great impact on the life of the drive, do not allow the operating environment temperature of the drive to exceed the allowable temperature range: -10℃~50℃ (When the temperature exceeds 50℃, it shall derate, reduce the rating by 1.5% for every 1℃ increase).

2. The drive will be mounted on the surface of flame-retardant objects, there shall be enough space around the drive for heat dissipation. Drivers are prone to generating a large amount of heat during operation. Mount the driver vertically onto the mounting support with screws.

3. Please install it in a place where it is not easy to vibrate. Vibration shall be no greater than 0.6G . Take special care to keep it away from equipment such as presses.

4. Avoid installing in place with direct sunlight, humidity and water droplets.

5. Avoid installing in the place where there are corrosive, flammable and explosive gases in the air.

6. Avoid installing in the place with oil, dust and metal dust.

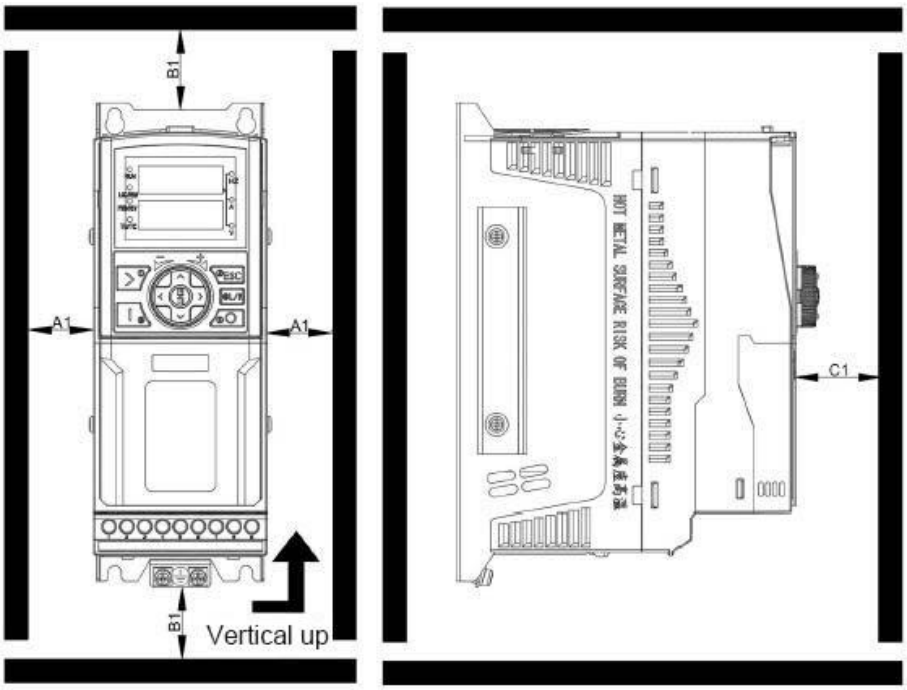

Drive Mounting Diagram

Single installation: when the power of the drive is not greater than 22kW, the size can be disregarded, when it is greater than 22KW, A shall be greater than 50mm

For top and bottom mounting: When the drive is mounted top and bottom, install the heat insulation deflector shown in the figure.

Power rating	Installation dimensions	
	B	A
≤22kW	≥100mm	May not be required
≥30kW	≥300mm	≥50mm

5.1.2 A concern for mechanical installations is heat dissipation, so please note the following:

1. Please install the drive vertically in positive direction, not upside down, to ensure that the heat is emitted upwards. If there are more drives in the cabinet, preferably mounted side by side. Where top and bottom mounting is required, please refer to the diagram, install the heat insulation deflector.
2. The installation space is in accordance with the diagram, to ensure that the drive cooling space. However, when arranging, please consider the heat dissipation of other devices in the cabinet.
3. The mounting bracket must be made of flame retardant material.
4. For metal dust applications, it is recommended to use the radiator outside the cabinet installation. At this time, the space inside the fully sealed cabinet shall be as large as possible.

5.2 Electrical Installation

5.2.1 Peripheral Electrical Components Selection Guide

Drive Peripheral Electrical Components Selection Guide

Model	MCCB (A)	Recommend contactors (A)	Recommended input side main circuit conductor mm^2	Recommended Output Side Main circuit conductor mm^2	Recommended control circuit wire mm^2
HV320-R70G3/4	10	10	2.5	2.5	1.0
HV320-1R5G3/4	16	10	2.5	2.5	1.0
HV320-2R2G3/4	16	10	2.5	2.5	1.0
HV320-004G3/4	25	16	4.0	4.0	1.0
HV320-5R5G3/4	32	25	4.0	4.0	1.0
HV320-7R5G3/4	40	32	4.0	4.0	1.0
HV320-011G3/4	63	40	4.0	4.0	1.0
HV320-015G3/4	63	40	6.0	6.0	1.0
HV320-018G3/4	100	63	6	6.0	1.0
HV320-022G3/4	100	63	10	10	1.0
HV320-030G3/4	125	100	16	10	1.0

HV320-037G3/G4	160	100	16	16	1.0
HV320-045G3/G4	200	125	25	25	1.0
HV320-055G3/G4	200	125	35	25	1.0
HV320-075G3/G4	250	160	50	50	1.0
HV320-093G3/G4	250	160	70	70	1.0
HV320-110G3/G4	350	350	120	95	1.0
HV320-132G3/G4	400	400	185	120	1.0
HV320-160G3/G4	500	400	150*2	150*2	1.0
HV320-185G3/G4	600	600	150*2	150*2	1.5
HV320-200G3/G4	600	600	150*2	150*2	1.5
HV320-220G3/G4	600	600	150*2	150*2	1.5
HV320-250G3/G4	800	600	185*2	185*2	1.5
HV320-280G3/G4	800	800	185*2	185*2	1.5
HV320-315G3/G4	800	800	150*3	150*3	1.5
HV320-355G3/G4	800	800	150*4	150*4	1.5
HV320-400G3/G4	1000	1000	150*4	150*4	1.5
HV320-450G3/G4	1200	1200	180*4	180*4	1.5
HV320-500G3/G4	1200	1200	180*4	180*4	1.5
HV320-560G3/G4	1200	1200	180*4	180*4	1.5
HV320-630G3/G4	1500	1500	180*4	180*4	1.5

5.2.2 Instructions for the use of peripheral electrical components

Instructions for use of peripheral electrical components of the drive

Accessory Name	Mounting position	Function Description
Air switch	Input circuit front end	Power outage during overcurrent of downstream equipment
Contactor	Between air switch and drive input side	Switching the drive on and off. Frequent energizing and de-energising of the drive via contactors (less than twice per minute) or direct starting shall be avoided.
AC Input Reactor	Drive Input Side	Improve the power factor on the input side; effectively eliminate the high harmonics on the input side to prevent other equipment from being damaged due to the distortion of voltage waveform; eliminate the input current imbalance caused by the unbalance of power supply phases.
EMC Input Filters	Drive Input Side	Reduces conducted and radiated interference to the outside of the drive; reduces conducted interference flowing from the power supply side to the drive, and improves the drive's anti-interference capability.
DC Reactors	Series connected to DC bus positive	Improve the power factor on the input side; improve the overall efficiency and thermal stability of the drive. Effectively eliminates the influence of high harmonics on the input side on the drive, and reduces the external conduction and radiation interference.
AC Output Reactor	Between the output side of the drive and the motor. Mounted close to the drive.	The output side of the drive generally contains more high harmonics. When the motor is far away from the drive, there is a large distributed capacitance in the line. One of the harmonics may generate resonance in the circuit, which will bring two effects: destroy the insulation performance of the motor, and damage the motor for a long time. Generate large leakage current, causing frequent protection of the drive. Generally, if the distance between the drive and the motor is more than 100m, it is recommended to install an output AC reactor.

5.2.3 Driver main circuit wiring method

Drive main circuit wiring method

A1~A2 main circuit connecting terminals

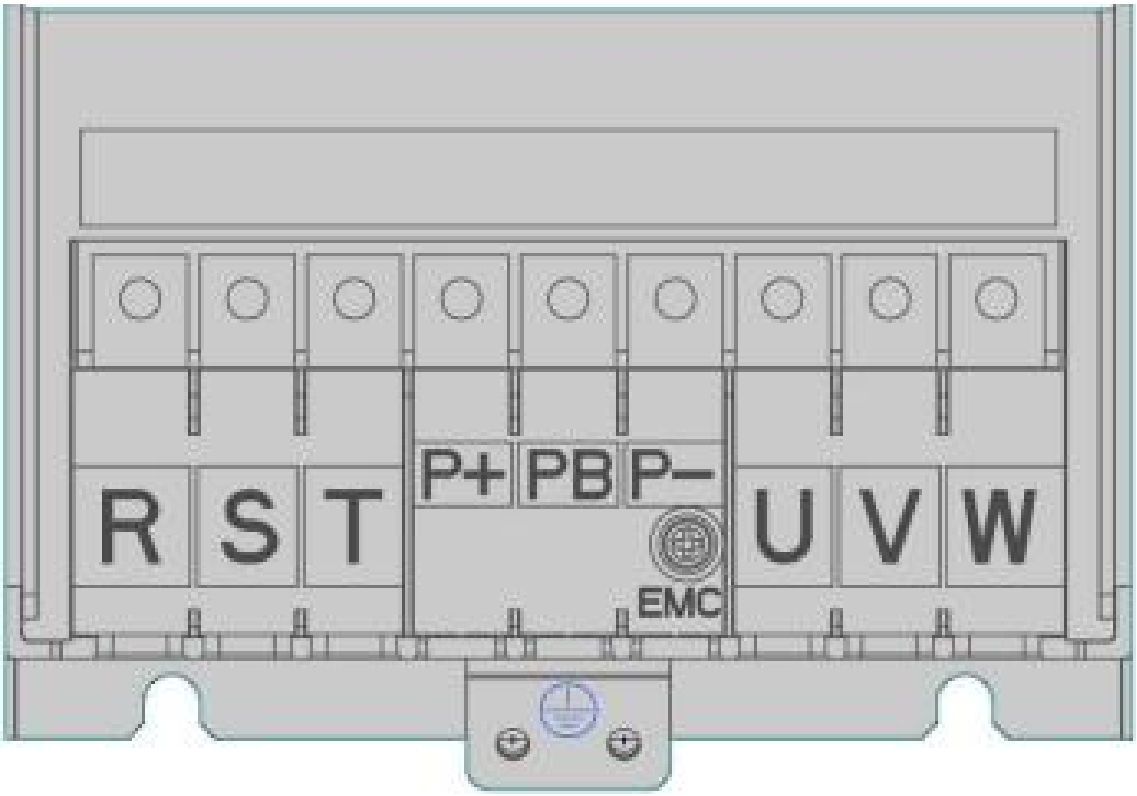

A3~A5 main circuit connecting terminals

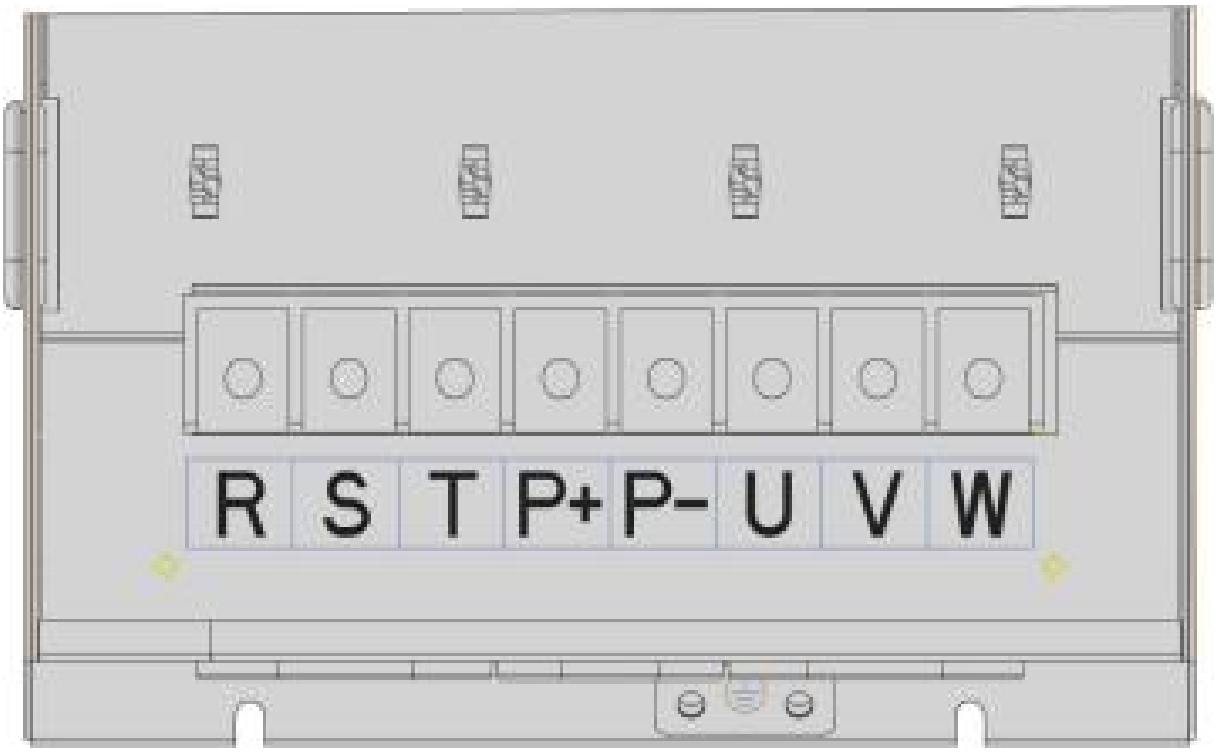

A6 Main circuit connecting terminals

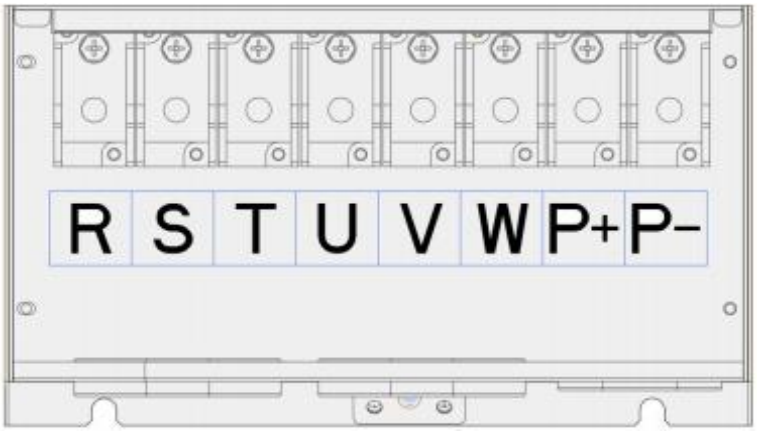

A7 Main circuit connecting terminal

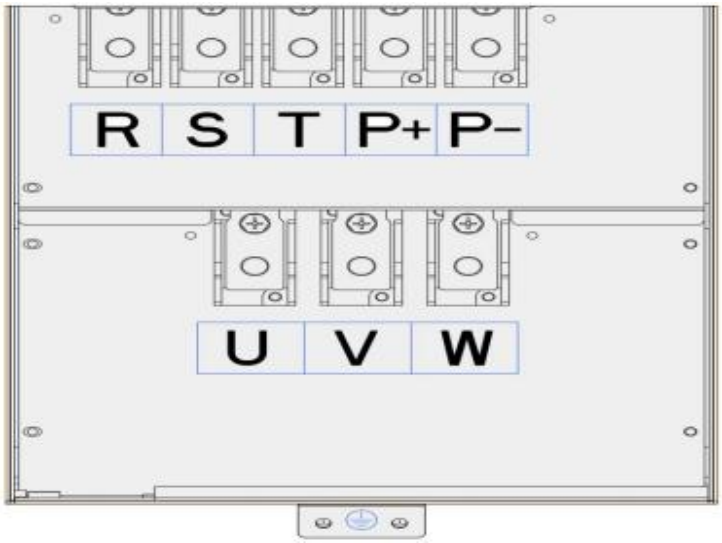

A8~A9 main circuit terminals

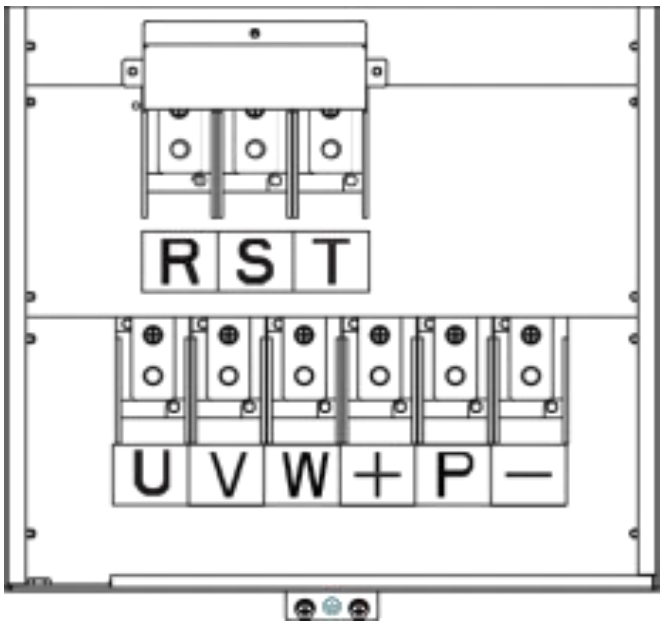

A10 Main circuit connecting terminal

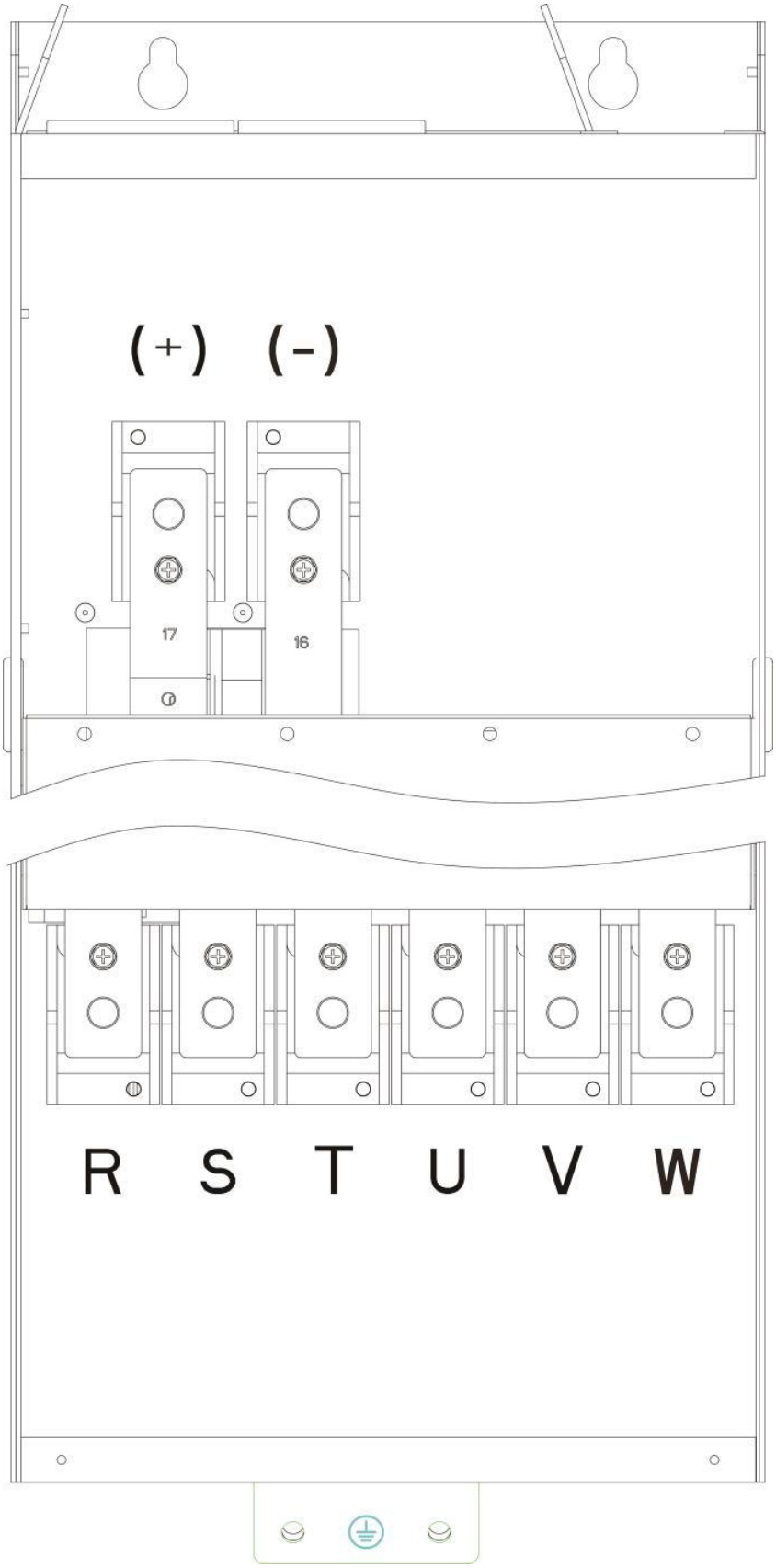

A11 Main circuit connecting terminal

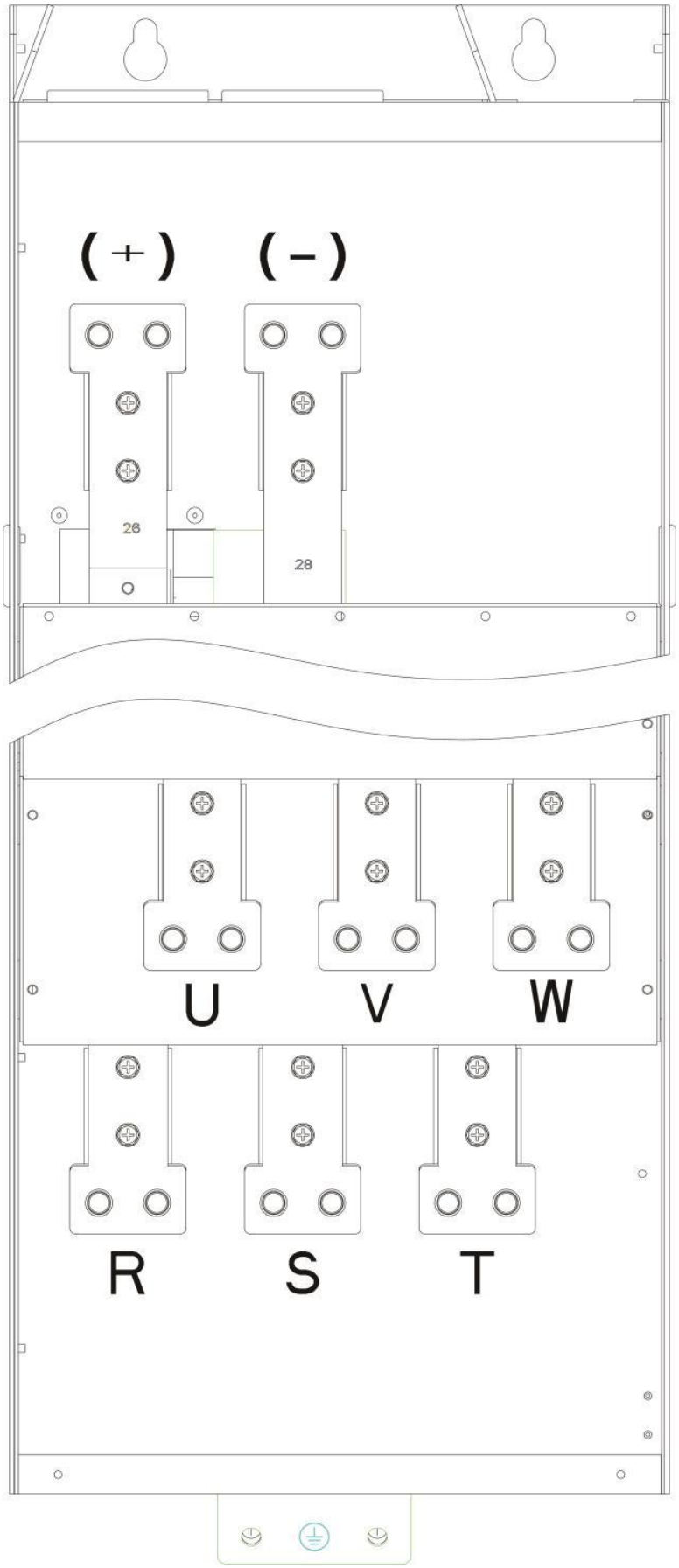

A12-A13 main circuit connecting terminals

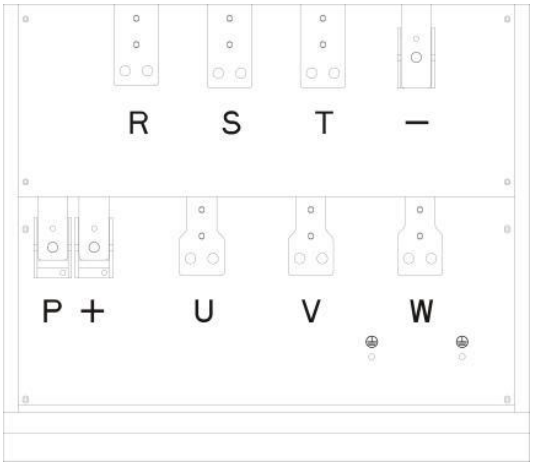

A14 Main circuit connecting terminal

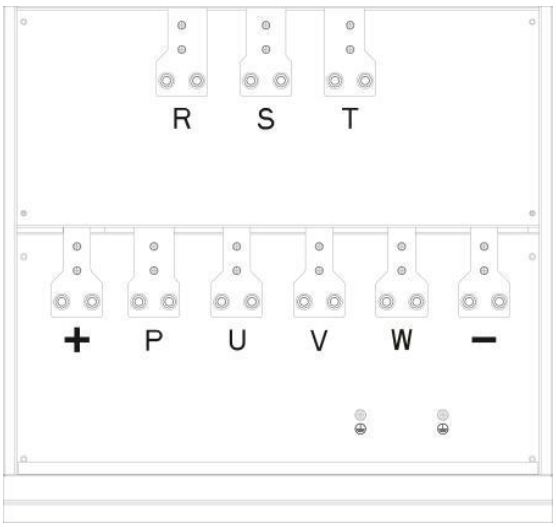

A15 Main circuit connecting terminal

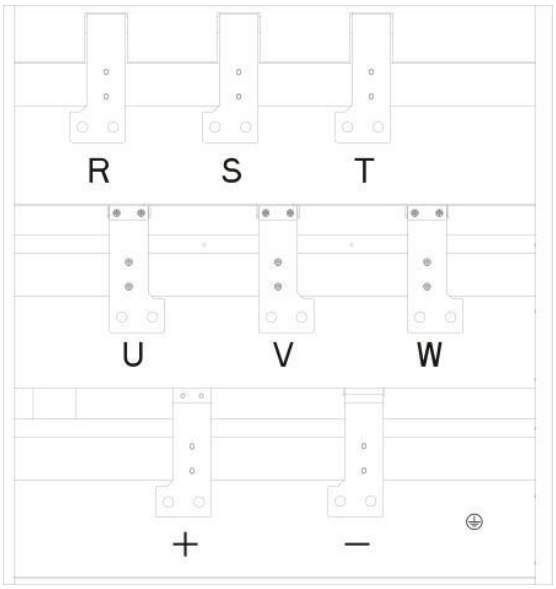

A16 Main circuit connecting terminal

5.2.4 Drive main circuit terminal description

Driver Main Circuit Terminal Description

Terminal Marking	Name	Description
R, S, T	Three-phase power input terminals	AC input three-phase power connection point
P+, P-	DC bus positive and negative terminals	DC busbar connection point/external brake unit
P+, PB	Brake Resistor Connection Terminals	External brake resistor connection point (models with built-in brake unit)
P, P+	External Reactor Terminals	External DC reactor connection point
U, V, W	Driver output terminals	Connecting the three-phase motor
E	Ground terminal	Ground terminal

Wiring Notes:

1. Input power supply R . S . T: For the input side wiring of the driver, no phase sequence requirements.

2. DC bus P +, P - terminal: note that just after the blackout DC bus P +, P - terminals haves residual voltage, it must confirm that the voltage is less than 36V before contact, otherwise there is a risk of electric shock. For 30kW or more, for the choice of external brake components, note that the P +, P - polarity can not be connected reversely, otherwise it leads to drive damage or even fire.

The wiring length of the brake unit shall not exceed 10m. Twisted-pair or close-twisted shall be used for parallel wiring. Do not connect the braking resistor directly to the DC bus, it may cause damage to the drive or even fire.

3. Braking resistor connection terminals P+ and PB:

The braking resistor connection terminals are only valid for models with built-in braking units up to 15kW(G1/G2) and 30kw (G3/G4). Refer to the recommended values for the braking resistor selection, and the wiring distance shall be less than 5m. Otherwise, the driver may be damaged.

4. External reactor connection terminals P, P+:

regarding DC reactor for G3/G4 models:

- 160kW and below: No DC reactor interface available; not optional
- 185kW-450kW: Built-In DC reactor
- 500kW-630kW: One external DC reactor shipped with order; built-in reactor with base is optional
- 710kW-800kW: Built-In DC reactor

5. Drive output side U, V , W:

Capacitors or surge absorbers must not be connected to the drive side outlet, otherwise it will cause frequent protection or even damage to the drive. When the motor cable is too long, it is easy to generate electrical resonance due to the influence of distributed capacitance, it will cause motor insulation damage or generate large leakage current to enable the drive overcurrent protection. When the length of the motor cable is greater than 100m, an AC output reactor must be added.

6. Ground terminal:

The terminal must be reliably grounded, and the resistance value of the grounding wire must be less than 0.1Ω. Otherwise, the equipment may work abnormally or even be damaged. Do not share the grounding terminal and the power supply neutral line N terminal.

5.2.5 Control module wiring instructions

Control terminal

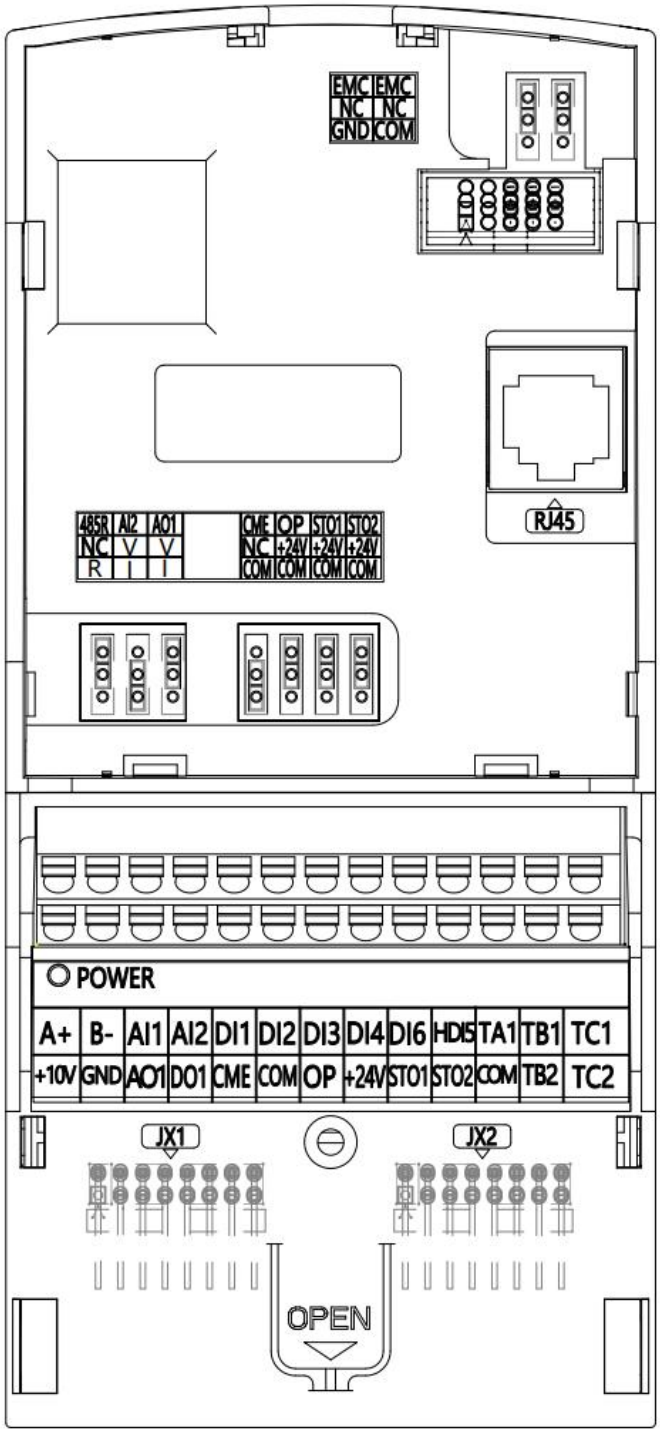

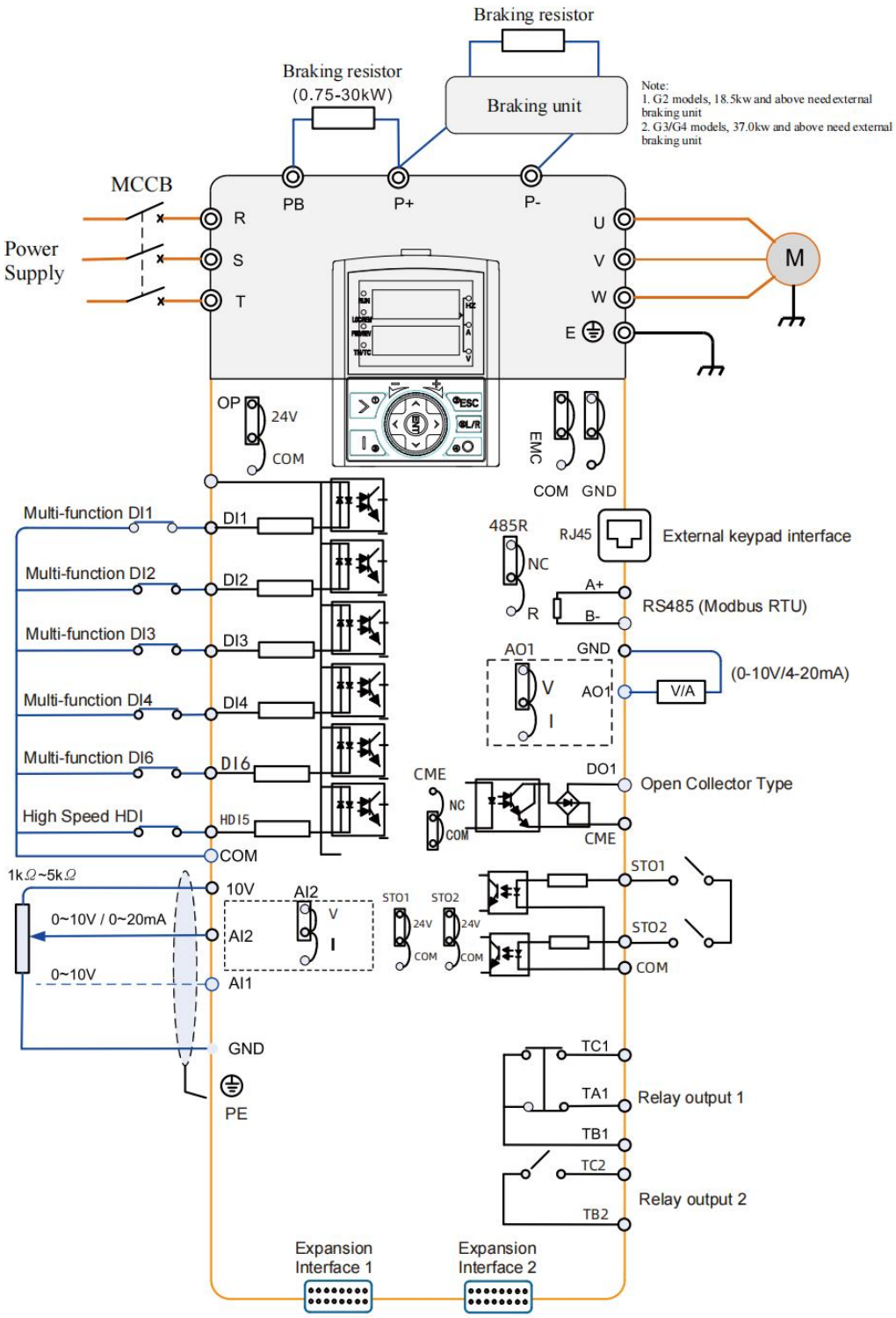

Wiring diagram

Mark	description	Function	Jumper position
485R	Terminal resistance selection	Terminal resistance effective	485R
		Terminal resistance ineffective	485R
AI2	AI2 type selection	DC 0V~10V	AI2
		0mA~20mA	AI2
AO1	AO1 type selection	DC 0V~10V	AO1
		0mA~20mA	AO1
CME -COM	DO ground terminal selection	The DO ground CME and the DI ground COM are short-circuited	CME

		When DO1 is driven by external power, do not short-circuit	CME
OP	External power supply input terminal selection	Connect to internal +24V	OP
		Connect to external +24V	OP
		Connect to internal COM	OP
STO1	Safety function (STO) terminal channel 1	STO1 terminal is connected to the internal +24V to enable the STO1 function	STO1
		STO1 terminal is connected to the external +24V to enable the STO1 function	STO1

STO2	Safety function (STO) terminal channel 2	STO2 terminal is connected to the internal +24V to enable the STO2 function	STO2
		STO2 terminal is connected to the external +24V to enable the STO2 function	STO2
EMC -GND	EMC terminal selection	GND and PE are short-circuited	EMC
		GND and PE are not short-circuited	EMC
EMC -COM	EMC terminal selection	COM and PE are short-circuited	EMC
		COM and PE are not short-circuited	EMC

Note: descriptions of functional jumpers as above

1 Description of control terminal functions:

Category	Terminal symbols	Terminal name	Function description
Power supply	+10V-GND	External +10V power supply	Provide +10V power supply, maximum output current: 10mA, generally used as external potentiometer power supply, potentiometer resistance range: 1kΩ~5kΩ.
	+24V-COM	External +24V power supply	Provide +24V external power supply, generally used as digital input/output terminal power supply and external sensor power supply, maximum output current: 100mA.
	OP	External power input terminal	The factory default is to connect to +24V when using external signals to drive DI1~DI6, OP needs to be connected to the external power supply.
Analog input	AI1-GND	Analog input terminal 1	1. Input voltage range: DC 0V~10V 2. Input impedance: 22kΩ
	AI2-GND	Analog input terminal 2	1. Input range: DC0V~10V/0mA~20mA, determined by the J8 jumper selection on the control board. 2. Input impedance: 22kΩ for voltage input, 500Ω for current input.
Digital input	DI1-COM	Digital Input 1	1.Opto-coupler isolation, compatible with bipolar inputs 2. Input impedance: 4kΩ 3. Voltage range at level input: 9V~30V
	DI2-COM	Digital Input 2	
	DI3-COM	Digital Input 3	
	DI4-COM	Digital Input 4	
	DI6-COM	Digital Input 6	
	HDI5-OP	High-speed pulse input terminal	In addition to the characteristics of DI1~DI6, it can also be used as a high-speed pulse input channel . Maximum input frequency: 100kHz
Digital output	DO1-CME	Digital Output 1	Optocoupler isolated, bipolar open collector outputs Output voltage range: 0V~24V Output current range: 0mA~50mA Note: The digital output ground CME is internally isolated from the digital input ground COM, but is factory shorted to COM via the J10 jumper CME on the control board (at this time DO1 is driven at +24V by default). When DO1 wants to be driven by an external power supply, the jumper must be removed.
Analog output	AO1-GND	Analog output 1	Voltage or current output is selected by J5 jumper on the control board. Output Voltage range: 0V~10V Output current range: 0mA~20mA

Category	Terminal Symbols	Terminal Name	Function description	
Relay output	TA1-TB1	Normally closed terminal	Contact drive capability : AC250V, 3A, COSø=0.4. DC 30V, 1A	
	TB1-TC1	Normal open terminal		
	TB2-TC2	Normal open terminal		
Relay output	TB3-TC3	Normal open terminal	Contact drive capability: AC250V, 3A, COSø=0.4. DC 30V, 1A	Expansion Card Option
	TB4-TC4	Normal open terminal		
Safety function (STO) terminal	STO1	STO channel 1	Internal connection: factory STO1 and STO2 are connected to +24V with jumpers by default; External: STO1, STO2 can be connected with external +24V, the specific wiring can refer to the STO related functions.	
	STO2	STO Channel 2		
Communication	A+-B-	Communication terminal	RS485 communication, standard Modbus RTU	
Extended Interface	JX1	Encoder Interface	Connectable to differential encoder PG card (supports differential input, open collector input, push-pull input, voltage input, +5V\+15V selectable), rotary encoder PG card, PT100\PT1000 temperature sensor inputs	
	JX2	Communication Expansion Interface	Can be connected to isolated RS485 card, CANLINK card, Profinetcard, EtherCATcard, ProfibusDP card, Ethernet/IP card, Modbus TCP card,	
External keyboard interface	RJ45	External keyboard interface	LED keyboard debugging, external LCD and PC debugging	

2 Control terminal wiring instructions:

(1) Analog input terminal: Because the weak Analog voltage signal is particularly vulnerable to external interference, so generally it need to use shielded cables, and wiring distance is as short as possible, and shall not be not more than 20m. In certain situations where analog signals are severely interfered with, filtering capacitors or ferrite cores need to be added to the analog signal source side. The lead-out wire of the shielding layer of the analog terminal shall be connected to PE on the driver side.

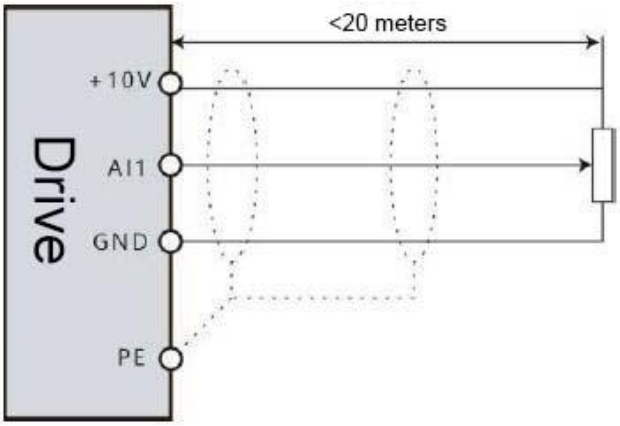

Analog input terminal wiring diagram

When AI selects current signal input, AI is the direction of current inflow and GND is the direction of current outflow.

Analog input terminal processing wiring diagram

Digital input terminal DI1~DI6 wiring:

Sink type wiring method

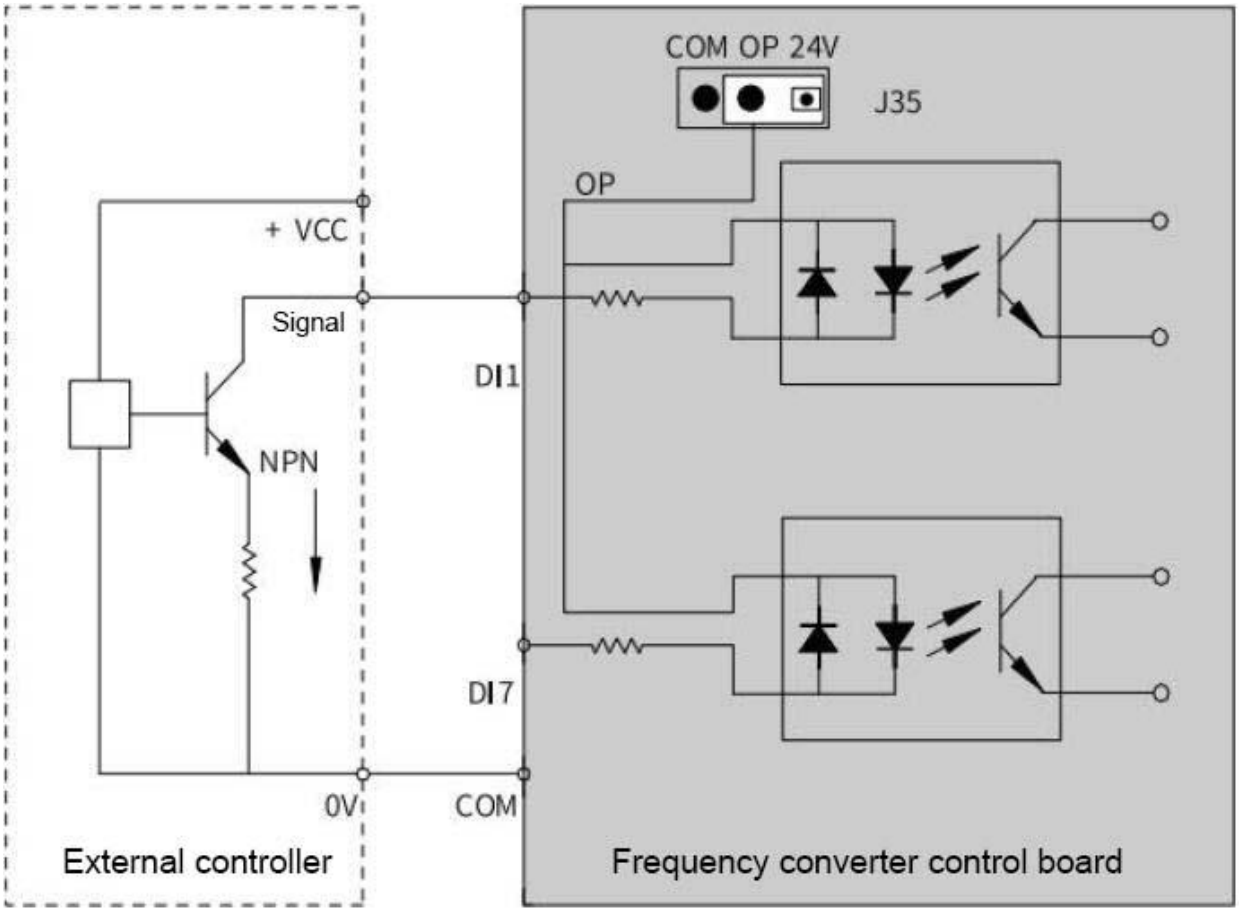

Sink type wiring method by using internal 24V power supply of frequency converter

Using the drive's internal 24V power supply is one of the most common wiring methods, shorting the drive OP to the 24V terminal and connecting the drive COM terminal to the external controller's 0V.

If external 24V power supply is used, the shorting piece between +24V and OP must be removed, and the 24V positive pole of the external power supply shall be connected to OP terminal, and the 0V of external power supply shall be connected to the corresponding DI terminal through the control contact of the controller.

Under this wiring method, the DI terminals of different drives can not be connected in parallel, otherwise it may cause DI malfunction; if the DI terminals need to be connected in parallel (between different drives), then a diode needs to be connected in series at the DI terminal (anode connected to DI) for use, and the diode needs to be satisfied: IF >40mA, VR >40V.

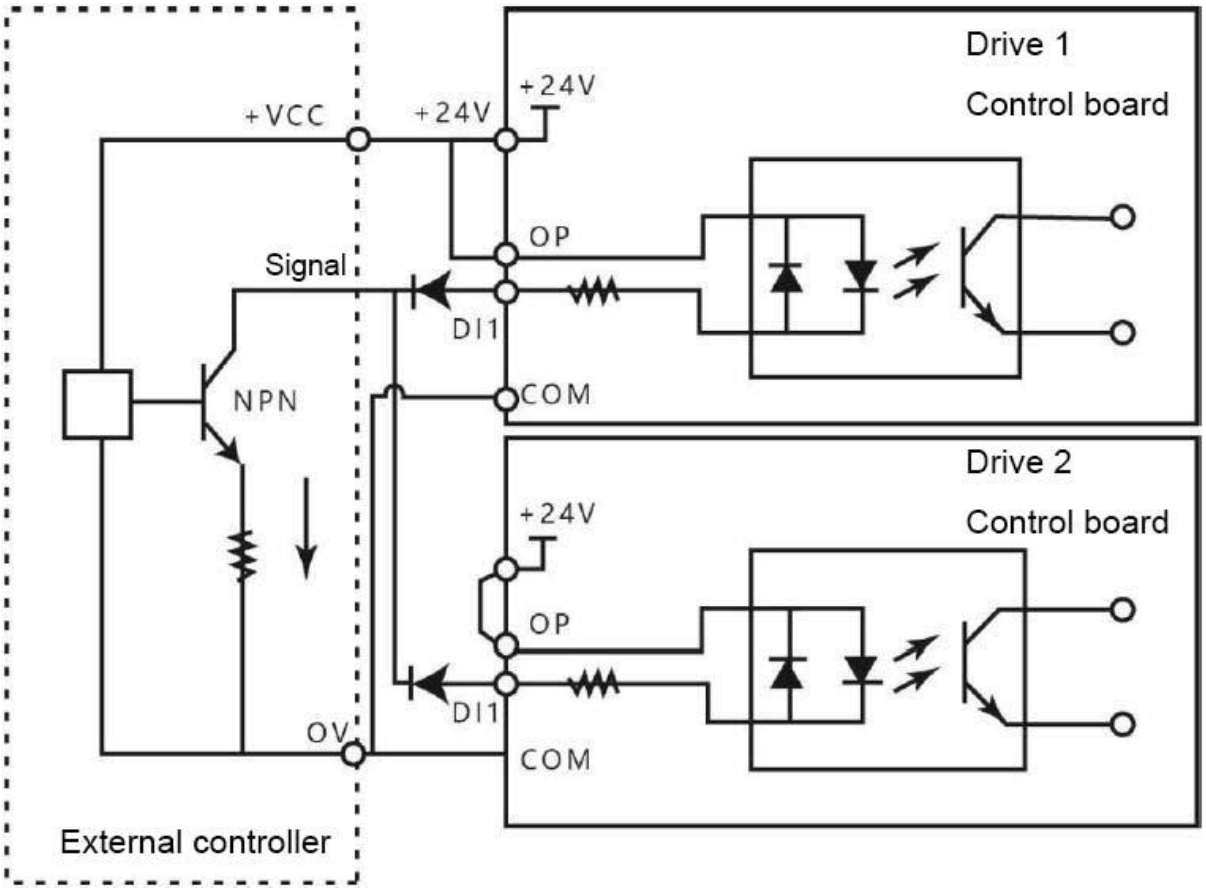

Multiple drive digital input terminals in parallel sink type wiring method

Source type wiring method:

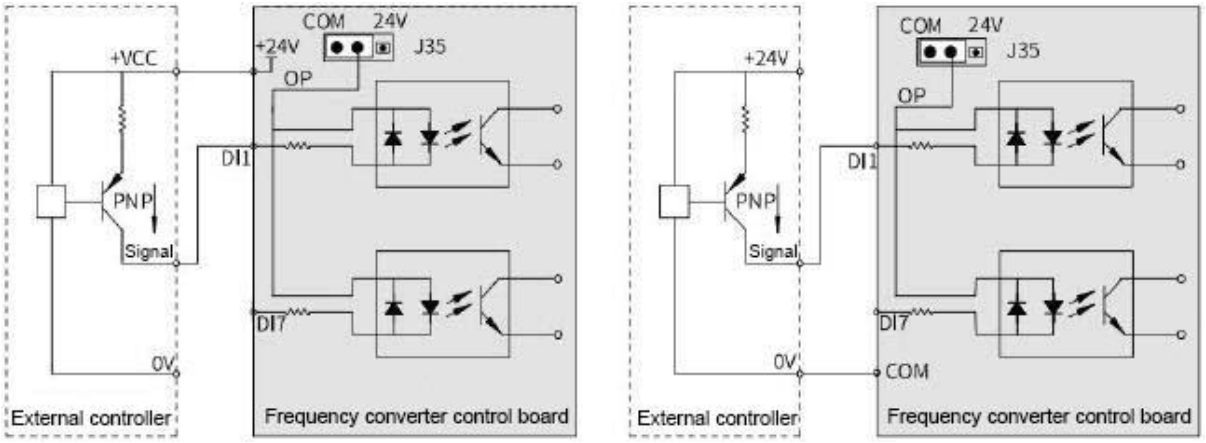

Source type wiring method by using internal 24V power supply of frequency converter

Source type wiring method by using external 24V power supply

Source type wiring method

If you use the internal 24V power supply of the driver, you must remove the shorting tab between +24V and OP, connect OP and COM together, and connect +24V to the common terminal of the external controller.

If external power supply is used, it is necessary to remove the shorting tab between +24V and OP, and connect OP and 0V of external power supply together, and 24V positive pole of external power supply is connected to the corresponding terminal of DI through the control contact of external controller.

(2) Control Signal Output Terminal Wiring Description

DO Digital output terminal:

When the digital output terminals need to drive the relay, absorption diodes shall be added on both sides of the relay coil. Otherwise, it is easy to cause damage to the DC 24V power supply. The driving capacity is not greater than 50mA.

Note: Be sure to install the absorption diode with the correct polarity. As shown in the figure below. Otherwise when there is output from the digital output terminal, it will immediately burn out the DC 24V power supply.

The digital output ground CME is internally isolated from the digital input ground COM, but CME and COM are externally shorted at the factory (in this case, DO1 is driven by +24V by default). When DO1 is driven by an external power supply, the external short between CME and COM must be disconnected.

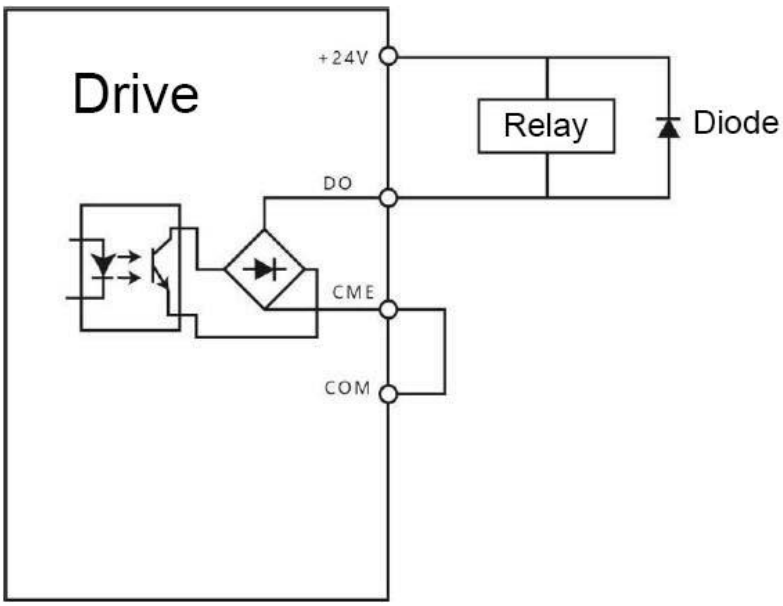

Digital Output Terminal Wiring Schematic Diagram

Relay output terminal wiring

Inductive loads (relays, contactors and motors) cause voltage spikes when the current is switched off. Relay contacts are protected by varistors and inductive loads are equipped with absorption circuits, such as varistors, RC absorption circuits, diodes, etc., to ensure that the interference is minimized at the time of switching off, as shown in the figure below, "Relay Output Terminal Anti-Interference Processing".

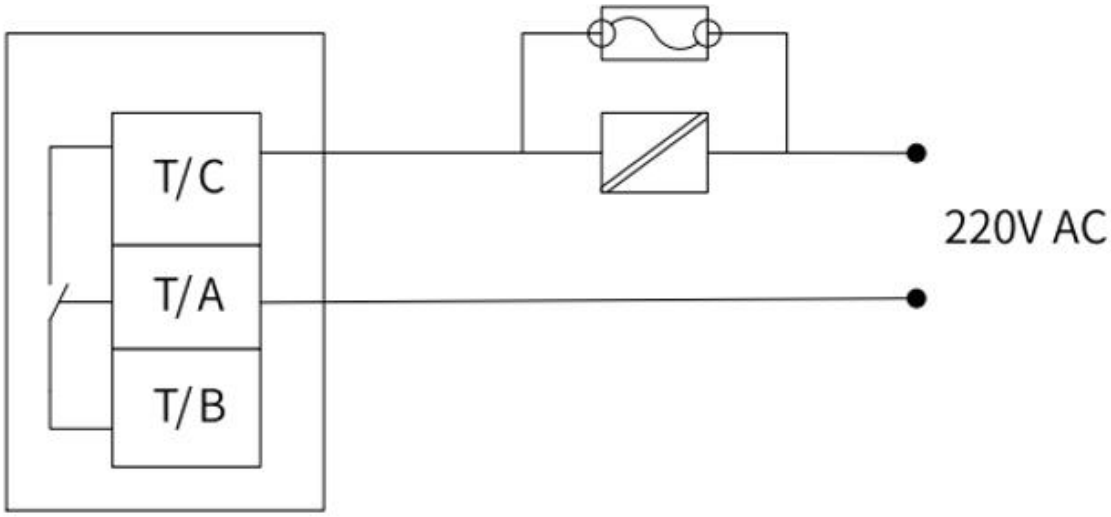

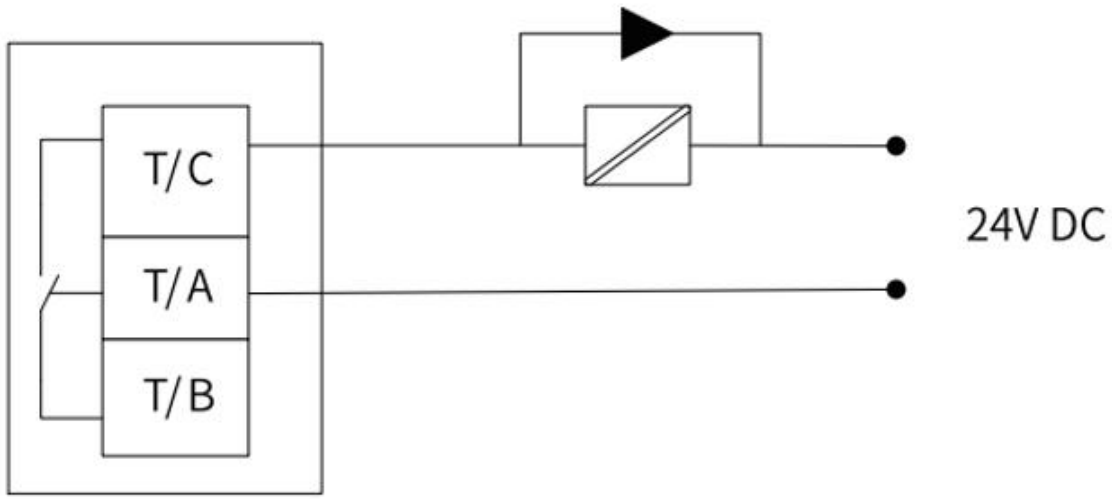

STO Safe Design and Wiring

1. External 24 V Connection Example

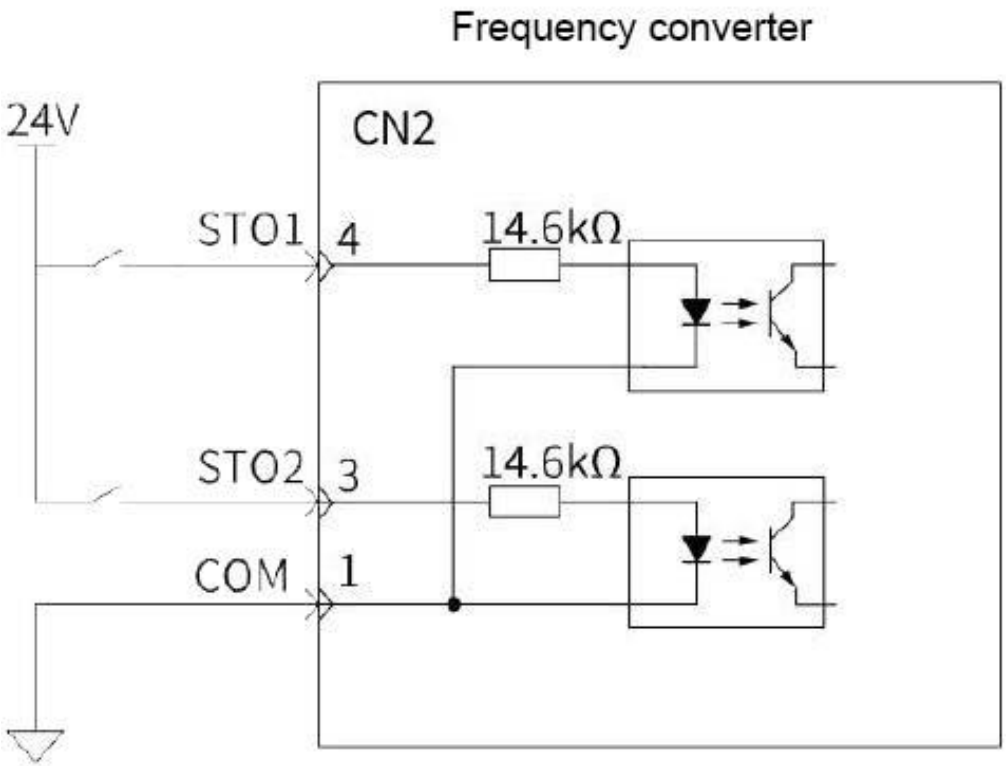

2. Internal 24 V connection example

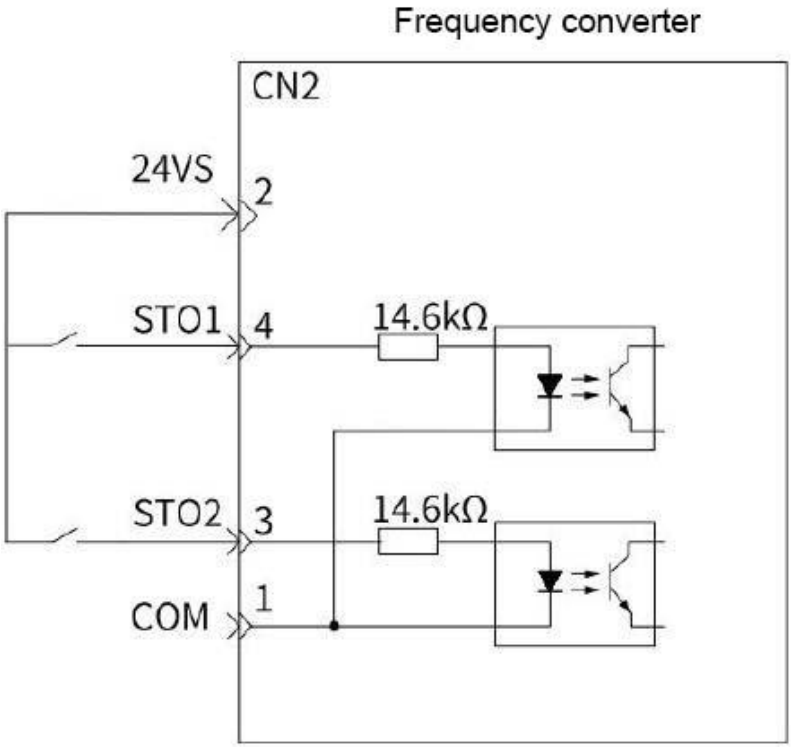

Chapter 6 Examples of Operation and Display Application

6.1 Introduction to the Operation and Display Panel

With the operation panel, you can modify the Function Parameters, monitor the working status and control the operation of the drive (start, stop) and other operations. The shape and functional areas are shown below.

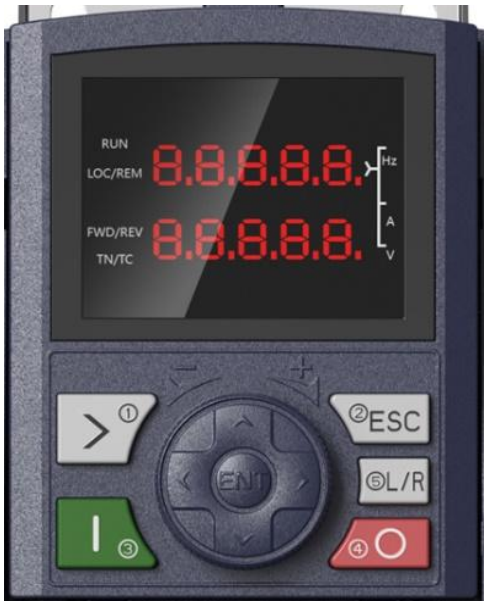

Schematic diagram of operation panel

6.1.1 Description of the function indicator:

RUN: When the light is off, it means that the drive is in the shutdown state, and when the light is on, it means that the drive is in the running state;

FWD/REV: Forward and reverse indicator, light indicates in reverse state;

TN/TC: tuning/torque control/fault indicator, light on means in torque control mode, light flashing slowly means in tuning status, a rapidly flashing lamp indicates a fault condition;

LOC/REM: Start/stop control mode indicator, off means panel control, keeping on means terminal control, flashing means communication control;

Unit indicator: Hz: Frequency unit, A: Current unit; V: Voltage unit; RPM (Hz+A) Speed unit, % (A+V %)

Digital display area: 5-digit LED display, which can display the set frequency, output frequency, various monitoring data and alarm code.

6.1.2 Keyboard button description table

Key	Name	Function
	Menu key	First-level menu entry or exit (Switch with running display interface)
	Confirmation key	Step-by-step access to the menu screen, and confirmation of setting parameters
Counterclockwise	Incremental key	Incrementing of data or function codes
Counterclockwise	Decrement key	Decrement of data or function codes
	Shift key	The display parameters can be selected cyclically under the shutdown display screen and the operation display screen; When modifying a parameter, you can select the modified bit of the parameter;
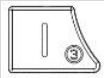	Run key	For running operations in keyboard operation mode
	Multifunction selection key	Function switching selection according to P7-01, it can be defined as command source or direction switching.
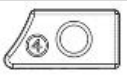	Stop/Reset	During the running state, pressing this key can be used to stop the running operation; in fault alarm status, this key can be used for reset operation, and the characteristics of this key are limited by function code P7-16.

6.2 Description of how to view and modify function codes:

The operation panel of the driver adopts a three-level menu structure for parameter setting and other operations. The three-level menu is described as follows: Function parameter group (first level menu) → Function code (second level menu) → Function code setting value (third level menu). The operation flow is shown in the figure.

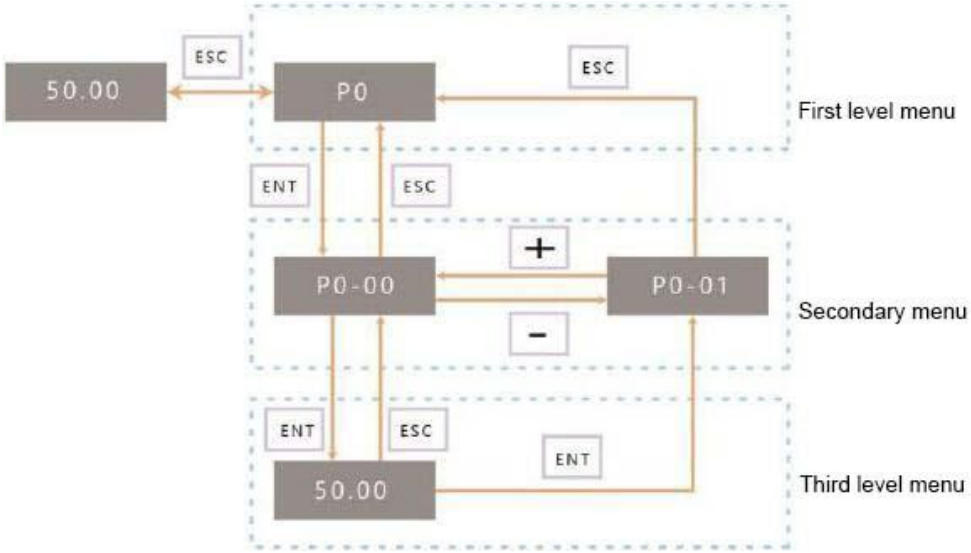

Three-level menu operation flow chart

Note: When operating in the three-level menu, you can press MENU or ENTER to return to the second-level menu.

The difference between pressing of the two keys is:

Press ENTER to save the set parameters and return to the secondary menu, and automatically transfer to the next function code; while press MENU to directly return to the secondary menu, without storing parameters, and return to the current function code.

Example: Example of changing the setting of function code P3-02 from 10.00Hz to 15.00Hz. (Bold letters indicate blinking bits)

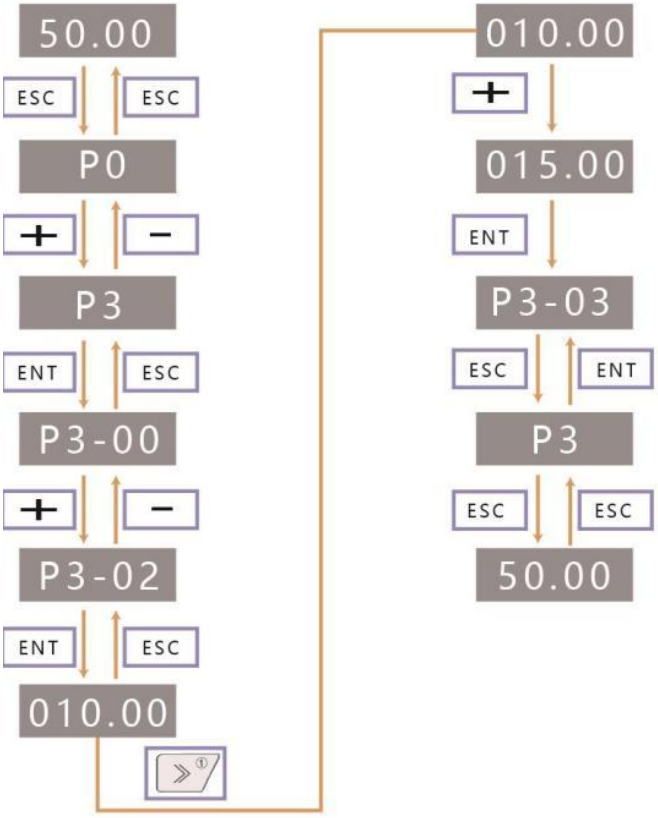

In the third level menu state, if the parameter does not have a blinking bit, it means that the function code cannot be modified, and the possible reasons are:

(1) This function code is a non-modifiable parameter. Such as actual detection parameters, operation record parameters, etc.

(2) This function code is not modifiable in the running state and can only be modified after a shutdown.

6.3 Organization of driver function codes:

The function code groups for the drive are described as follows:

Function code group	Function description	Description
P0-PP	General-purpose Drive Function Codes	All functions are modified by this function code
H0~HC	Enhanced Function Code Group	Multi-motor parameters, AI/AO characteristic correction, optimized control, PLC card and other extension function settings
U0~U3	Operating status parameter group	Operating status parameters

In the function code browsing status, press the **Up** or **Down** key to select the function code group number you wish to view, as shown below:

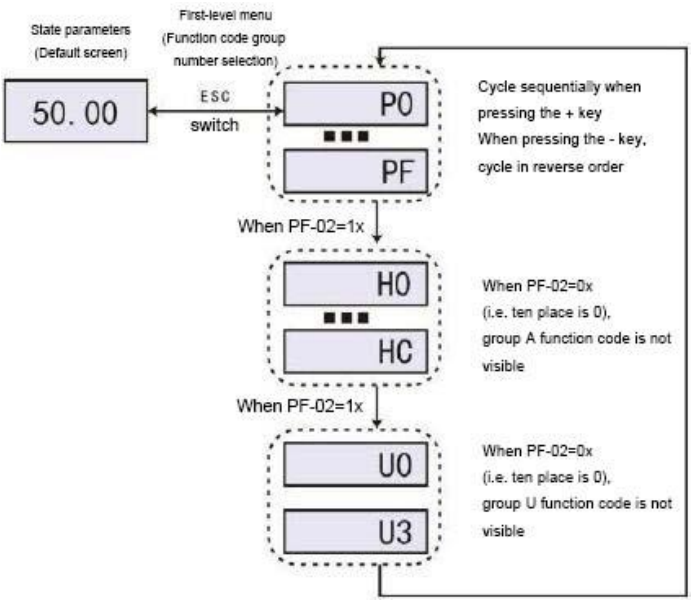

Function code group number browsing operation

Among them, Group H and Group U function codes of PP-02 function codes are controlled whether to be displayed or not:

PP-02	Factory value: 11		
	Set value	The tens place in the decimal system	The ones place in the decimal system
	Function	Group H display selection	Group U display selection
	Setting range	0: no display; 1: no display	0: no display; 1: display

6.4 View status parameters

The shift key "。" on the drive panel can be used to display the various status parameters in stop or run status. It can select whether to display the parameter based on the binary bits of function codes P7-03 (operating parameter 1), P7-04 (operating parameter 2), and P7-05 (shutdown parameter).

There are sixteen shutdown status parameters that can be selected to be displayed or not in the shutdown state, which are described as follows:

P7-05	LE Stoppage display parameters	Bit00: Setting frequency (Hz) Bit01: Busbar voltage (V) Bit02: DI input status Bit03: DO output status Bit04: AI1 Voltage (V) Bit05: AI2 Voltage (V) Bit06: AI3 Voltage (V)	Bit07: Count value Bit08: Length value Bit09: PLC Phase Bit10: Load speed Bit11: PID setting Bit12: PULSE Input pulse Frequency	33	☆

Switch the display of the selected parameters in sequence by pressing the key.

In operating status, the five operating status parameters, including operating frequency, set frequency, bus voltage, output voltage and output current, are displayed by default. Whether other parameters are displayed is set by the P7-03 and P7-04 function codes:

P7-03	LED operation display parameter 1	Bit00: Operating frequency1 (Hz) Bit01: Setting frequency (Hz) Bit02: Bus voltage Bit03: Output voltage Bit04: Output current (A) Bit05: Output power (KW) Bit06: Output torque (%)	Bit08: DO output status Bit09: AI1 Voltage (V) Bit10: AI2 voltage (V) Bit11: AI3 Voltage (V) Bit12: Count value Bit13: Length value Bit14: Load speed display Bit15: PID setting	1P	☆

		Bit07: DI input status			
P7-04	LED operation display parameter 2	Bit00: PID Feedback Bit01: PLC Phase Bit02: PULSE Input frequency Bit03: Operating frequency2 (Hz) Bit04: Remaining running time Bit05: AI1 voltage before correction Bit06: AI2 Voltage before correction Bit07: AI3 Voltage before correction	Bit08: Line speed Bit09: Current power-up time Bit10: Current Runtime Bit11: PULSE Input frequency Bit12: Communication set value Bit13: Encoder feedback speed Bit14: Master frequency X display (Hz) Bit15: Auxiliary frequency Y display (Hz)	0	☆

When the drive is powered down and then powered up again, the displayed parameters are defaulted to the parameters selected before the drive was powered down.

Switch the display of selected parameters in sequence by pressing the key, and the parameter value is set as follows:

For example, the user sets the parameters for the switched display to be: operating frequency, bus voltage, output voltage, output current, output power, output torque, PID feedback, and encoder feedback speed, set binary data according to the corresponding bit of the actual displayed data:

P7-03: 0000 0000 0111 1101B

P7-04: 0010 0000 0000 0001B

Convert to hexadecimal data as:

P7-03: 007DH

P7-04: 2001H

Keypad set values are displayed as P7-03: H. 1043; P7-04: H. 2001

P7-17	Second row LED display parameters	0: Operating frequency1 (Hz) 1 : Setting frequency (Hz) 2: Busbar voltage 3: Output voltage	4: Output current (A) 5: Output power (kW) 6: Output torque (%)	0	☆

Set value of P7-17 can be changed when the drive is in stop state or in the running state, in order to enable monitoring of auxiliary parameters.

6.5 Start and stop control of the drive

6.5.1 Selection of the source of the start-stop signal

There are three sources of start/stop control commands for the drive, namely panel control, terminal control, and communication control, selection is made through function parameter P0-02.

	Command Source Selection		Factory value: 0	Description
P0-02	Setting range	0	Operation panel command channel (LED off)	Press RUN, STOP to start and stop the drive.
		1	Terminal Command Channel (LED on)	The S terminal must be defined as the start/stop command terminal.
		2	Communication command channel (LED flashing)	Adopt MODBUS-RTU protocol

6.5.1.1 Panel start/stop control

Through the keyboard operation, make the function code P0-02=0, that is, for the panel start-stop control mode, press the RUN key on the keyboard, the drive that is to start running (RUN indicator is on); in the drive running state, press the STOP key on the keyboard, the drive stops running (RUN indicator is off).

6.5.1.2 Terminal start-stop control

The terminal start-stop control method is suitable for scenarios when the sampling toggle switches and electromagnetic switch buttons as the application system start-stop, is also suitable for electrical design where controllers use dry contact signals to control the operation of the drive.

The A (E) series provides multiple terminal control methods, with the switch signal mode determined by function code P4-11 and the input port of the start and stop control signal determined by function codes P4-00~P4-09. For specific setting methods, please refer to the detailed explanation of function codes such as P4-11, P4-00~P4-09.

Example 1: It is required to use a toggle switch as the drive start and stop switch, and connect the forward running switch signal to the DI2 port and connect the reverse running switch signal to the DI4 port. The usage and setting method are shown in the following figure:

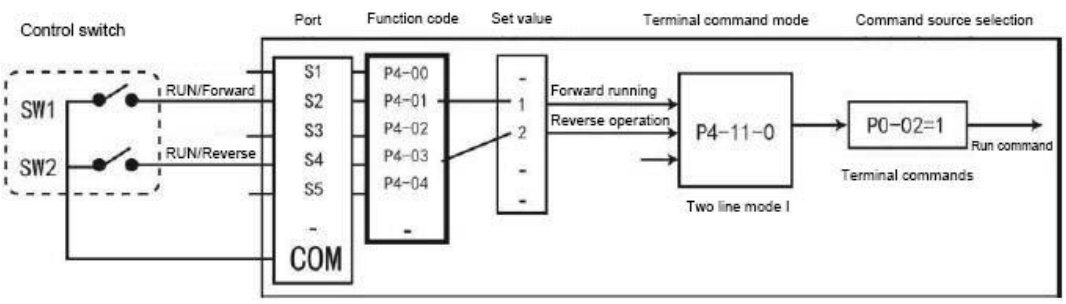

Example of terminal start/stop control method

In the control mode shown above, when the SW1 command switch is closed, the drive runs in the forward direction. When the SW1 command switch is disconnected, the drive stops; When the SW2 command switch is closed, the drive runs in reverse direction, and when the SW2 command switch is disconnected, the drive stops;

If SW1 and SW2 close or disconnect simultaneously, the drive will stop running.

Example 2: It is required to use button electromagnetic switch as the start and stop switch for the drive, and connect the start button signal to the DI2 port, connect the stop button signal is connected to the DI3 port, and the reverse operation button signal is connected to the DI4 port. The usage and setting methods are shown in the following figure:

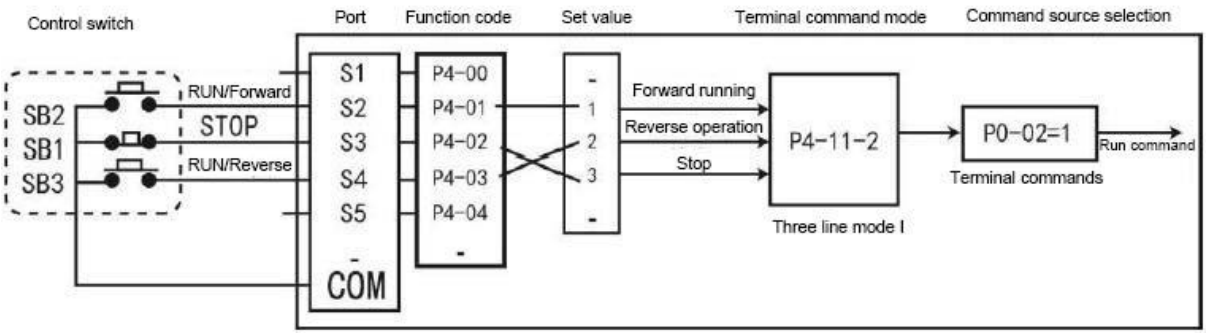

Example of terminal start/stop control method

In the above control mode, during normal startup and operation, the SB1 button must be kept closed, and the instant of disconnection of such button will stop the drive; the commands of SB2 and SB3 buttons take effect at the closing action edge, the operating status of the drive is based on the last key action of these three buttons.

6.5.1.3 Communication start-stop control

The application of the host computer to control the operation of the drive by communication has become more and more, such as through the RS485 and other networks, it can communicate with this series of drives. On the multifunctional expansion port of the drive, insert the corresponding communication interface card and select the control command source as the communication mode (P0-02=2) to control the start and stop operation of the drive through communication mode. The function codes related to communication settings are shown in the following figure:

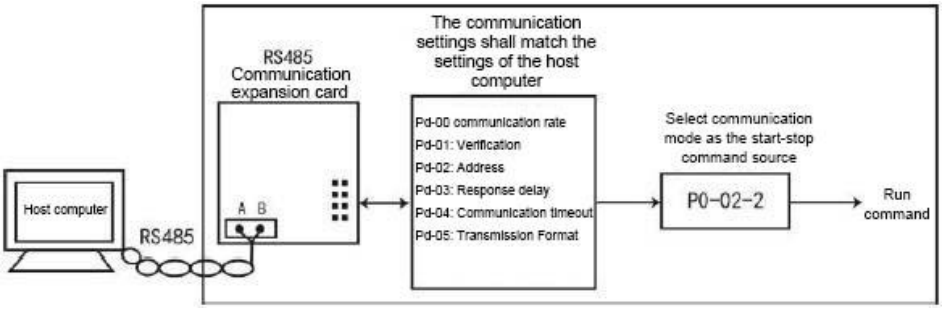

Example of start/stop control with the communication method

In the above figure, setting the communication timeout time (Pd-04) function code to a non-zero value activates the drive automatic shutdown function after a communication timeout failure, which prevents uncontrolled operation of the drive due to a communication line failure or a host computer failure.

This function can be turned on in some applications.

The drive communication port is equipped with the MODBUS-RTU slave protocol, and the host computer must communicate with it by using the MODBUS-RTU master protocol. For specific definitions related to the communication protocol, please refer to the detailed description of the RS485 communication expansion card in the manual appendix.

6.5.2 Start-up mode

There are three kinds of start-up modes for the drive, namely, direct start-up, speed tracking restart and pre-excitation start-up of asynchronous motor, select P6-00=0 through the function parameter P6-00, and select the direct start-up mode, which is suitable for most small inertia loads. The frequency curve of the start process is shown in the following figure. The "DC braking" function before startup is suitable for driving elevators and heavy load lifting; "Starting frequency" is applicable to driving the equipment that requires torque impact start-up, such as cement mixer equipment.

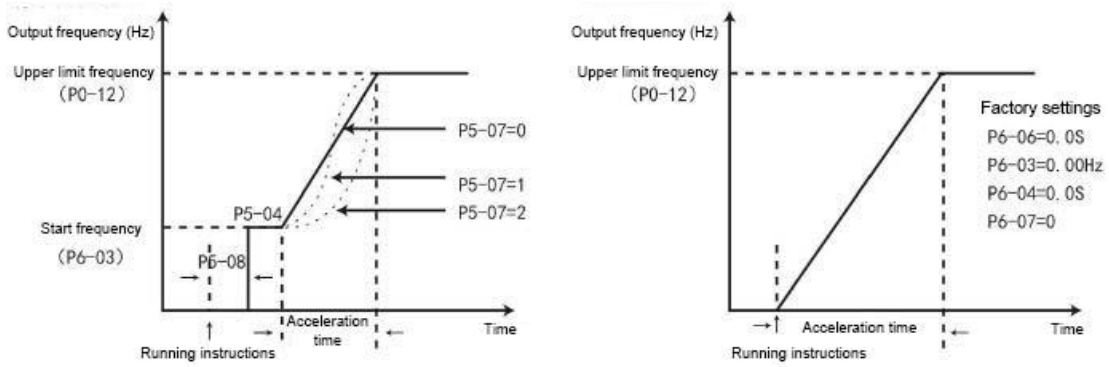

Direct start-up method

P6-00=1, speed tracking restart mode, suitable for driving the large inertia mechanical load, the frequency curve of the starting process is described as the following figure. If the load motor is still running by inertia when the drive starts running, if the speed tracing restart is adopted, it can avoid the start-up overcurrent.

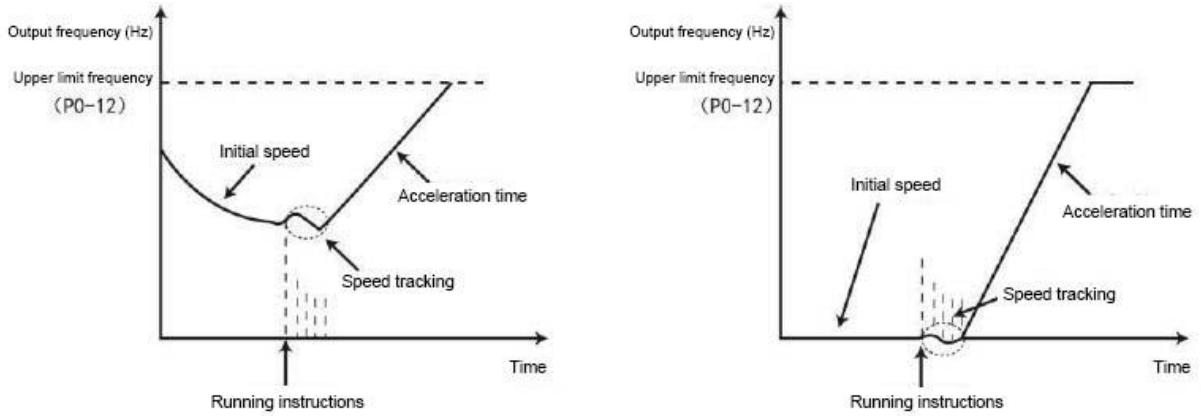

Speed and tracking restart mode

P6-00=2, pre-excitation starting method, this method is only applicable to induction asynchronous motor loads. Pre-excitation of the motor before start-up improves the fast response characteristics of the asynchronous motor and meets the application requirement requiring short acceleration time, the frequency curve of the start-up process is described as follows:

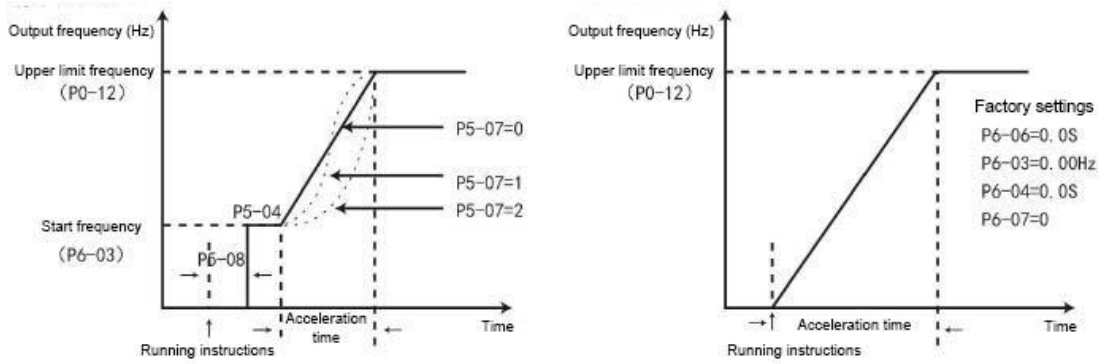

Pre-excitation startup method

6.5.3 Stopping mode

There are two stopping modes for the drive, deceleration stop and free stop, which are selected by function code P6-10.

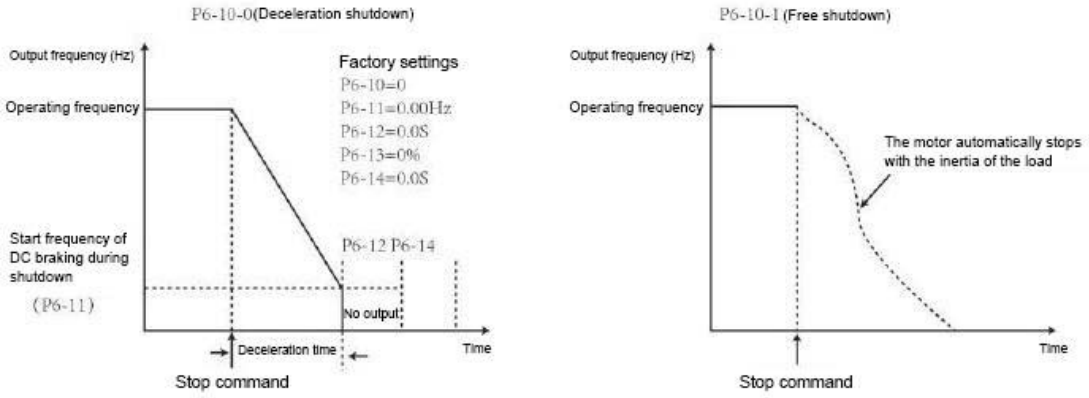

Stopping mode

6.5.4 Timed shutdown function

The drive supports the timed stop function, and the timed function is made effective by P8-42, and the timed time is determined by P8-43 and P8-44.

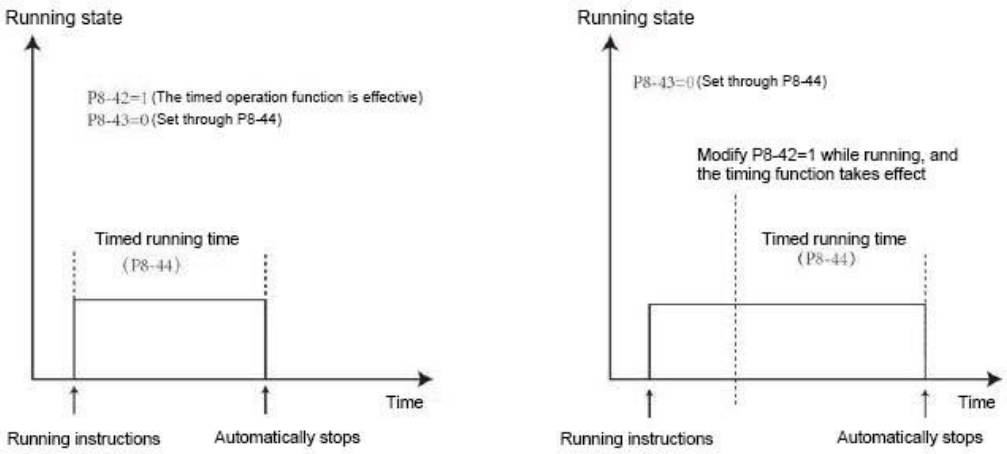

Timed stop function

For the length of the timing time, users are also provided with available analog quantity (such as potentiometer signals) for setting, please refer to the detailed description of the P8-43 function code.

6.5.5 Jog operation

In many applications, the drive is required to run temporarily at low speeds to facilitate the testing of the condition of the equipment, or other debugging actions, it is more convenient if the jog operation is made.

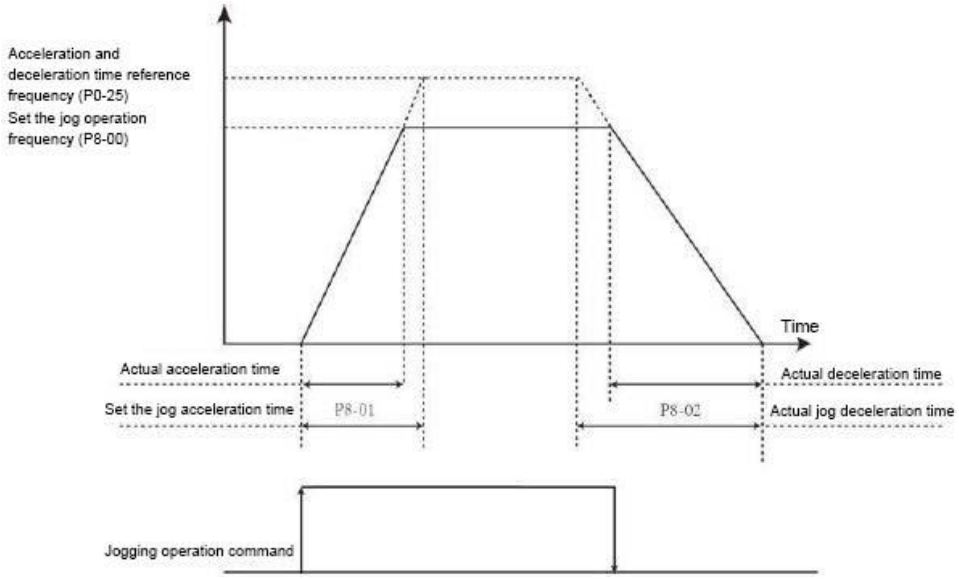

Jog operation mode

6.5.5.1 Parameter setting and operation of jog operation via the operating panel

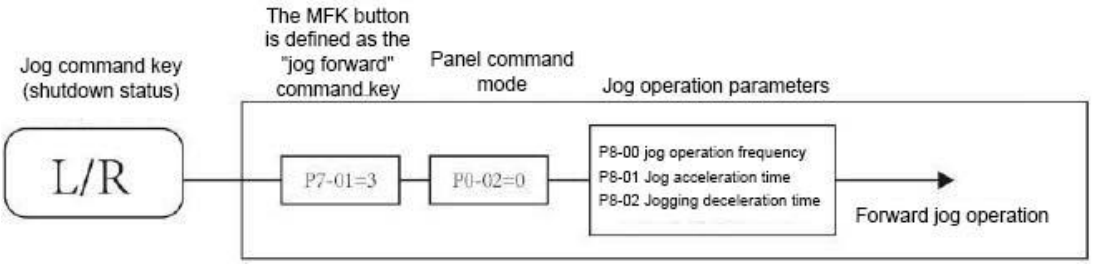

Jog operation via operating panel

After setting the relevant function code parameters as shown in the above figure, when the drive is in a stop state, press the JOG key to start the drive to run at low speed and in forward direction. Release the JOG key to slow down and stop the drive.

For jog operation in reverse direction, it is necessary to set P7-01=4 and P8-13=0 to allow running in reverse direction, then press the JOG/QUICK key to operate.

6.5.5.2 Parameter setting and operation of jog operation via the digital input port

On production equipment that require frequent jog operations, such as textile machines, it is more convenient to control jog operation with keys or buttons, the relevant function code settings are shown in the following figure:

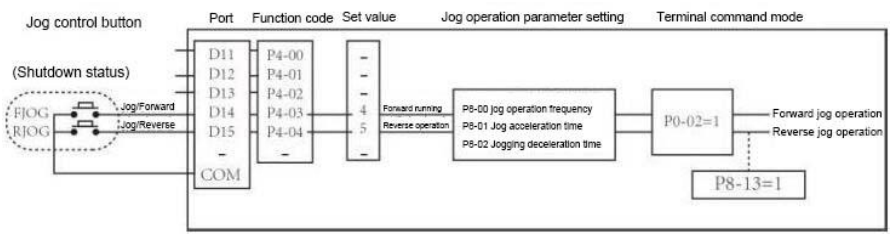

Communication S-port jog operation

After setting the relevant function code parameters as shown in the above figure, in the drive stop state, press the JOG button, the drive will start low-speed forward operation, and release the JOG button, the drive will decelerate and stop. Similarly, pressing the JOG button can be used for reverse jog operation.

6.5.6 Motor parameters to be set

When the drive operates in the "vector control" (P0-01=0 or 1) mode, it is highly dependent on the accurate motor parameters, which is one of the important differences from the "V/F control" (P0-01=2) mode, and the drive must obtain the accurate parameters of the controlled motor for the drive to have good drive performance and operating efficiency.

The required motor parameters are listed in the following table (function codes for default motor 1)

Motor 1 parameters	Parameter description	Description
P1-00	Motor type	Asynchronous, variable frequency asynchronous, synchronous
P1-01~P1-05	Motor Rated Power/ Voltage/ Current/ Frequency/ Speed	Model parameters, manual input
P1-06~P1-20	Equivalent stator resistance, inductive reactance, rotor inductance, etc. inside the motor	Tuning parameter
P1-27~P1-34	Encoder parameters, vector mode with sensors needs to be set	Encoder parameters

6.5.7 Automatic tuning and identification of motor parameters

Methods to allow the drive to obtain the internal electrical parameters of the controlled motor include: dynamic identification, static identification, and manual input of motor parameters.

Identification method	Application	Identification effect
No-load	Suitable for synchronous motors and asynchronous motors,	Best

dynamic identification	scenario where the motor is conveniently detached from the application system	
Load dynamic identification	Suitable for synchronous motors and asynchronous motors, scenario where the motor is not convenient to detach the motor from the application system	OK
Static identification	Suitable for synchronous motors and asynchronous motors, scenario where the motor is difficult to detach from the load and does not allow operation of dynamic identification.	Relatively poor
Manual parameter input	Only applicable to asynchronous motors, scenario where the motor is difficult to separate from the application system, copy and input the parameters of motor of the same model that has been successfully identified by the drive previously into the corresponding function codes P1-00~P1-10	OK

The steps for auto-tuning the motor parameters are described as follows:

The following is an example of how to identify the parameters of the default motor 1. The identification method for motor 2 is the same, except that the function code has to be changed accordingly.

Step 1: If the motor can be completely disconnected from the load, mechanically disengage the motor from the load when the power supply is disconnected, so that the motor can rotate freely with no load.

Step 2: After power on, first select the drive command source (P0-02) as the operation panel command channel.

Step 3: Enter the nameplate parameters of the motor accurately (e.g. P1-00~P1-05), please enter the following parameters according to the actual parameters of the motor (select according to the current motor):

Motor selection	Parameter
Motor 1	P1-00: Motor type selection P1-01: Motor rated power P1-02: Motor rated voltage P1-03: Motor rated current P1-04: Motor rated frequency P1-05: Motor rated speed
Motor 2	H2-00~H2-05: Same as the definitions above

Step 4: If it is an asynchronous motor, then for P1-37 (tuning selection, for motor 2, it corresponds to H2-37 function code), please select 2 (asynchronous motor complete tuning) or 12 (synchronous motor complete tuning), press ENTER to confirm, at this time, the keypad displays TUNE, as shown in the figure below:

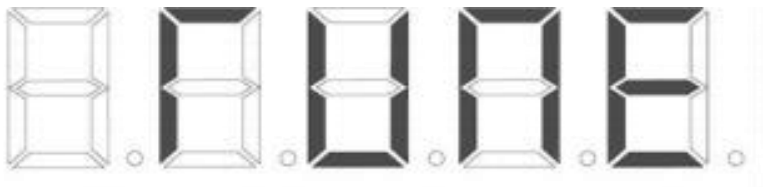

Then press the RUN key on the keypad panel, the drive will drive the motor to accelerate and decelerate, make forward/reverse rotation operation, the run indicator is on, identification runs for about 2 minutes, when the above display information disappears, return to the normal parameter display state, indicating that the tuning is completed. After the complete tuning, the drive will automatically calculate the following parameters of the motor:

Motor Selection	Parameter
Motor 1	P1-06: Asynchronous motor stator resistance P1-07: Asynchronous motor rotor resistance P1-08: Leakage reactance of asynchronous motor P1-09: Asynchronous motor mutual inductance P1-10: Asynchronous motor no-load current P1-16: Synchronous motor stator resistance P1-17: Synchronous motor D-axis inductance P1-18: Synchronous motor Q-axis inductance P1-20: Synchronous motor counter electromotive force
Motor 2	H2-06 ~ H2-10: Same as the definitions above

If the motor cannot be completely disconnected from the load, for P1-37 (H2-37 for motor 2), please select 1 (asynchronous motor static tuning) or 11 (synchronous motor static tuning), then press the RUN key on the keypad panel to start the identification operation of the motor parameters.

Note on the identification of synchronous motors:

Due to the driven synchronous motor system, encoder feedback signals are required, the encoder parameters need to be set correctly before identification; during synchronous motor system identification process, there must be rotating action, the best identification method is no-load dynamic identification. If the conditions do not allow, load dynamic identification can be made.

Chapter 7 Function Parameters Table

PP-00 is set to a non-zero value, i.e., the parameter protection password is set. In the function parameter mode and user change parameter mode, the parameter menu must be accessed after correctly entering the password; for canceling the password, it shall set PP-00 to 0.

The parameter menu in the user-customized parameter mode is not password protected.

Groups P and H are the basic function parameters, and Group U is the monitoring function parameters.

The symbols in the function table are explained as follows:

"☆": Indicates that the setting value of this parameter can be changed when the drive is in the stop state and running state;

"★": Indicates that the setting value of this parameter cannot be changed when the drive is in running state;

"●": Indicates that the value of this parameter is the actual detection record value and cannot be changed;

"*": Indicates that the parameter is a "manufacturer's parameter", only for the manufacturer's use, it prohibits the users from performing operations for such parameter;

(E): Indicates parameters related to synchronous motor control with HV320S models.

7.1 Basic Function Parameter Table

Function code	Name	Setting range	Factory value	Change	Modbus address
P0 Basic Function Group					
P0-00	GP type display	1: G type (constant torque load model) 2: P type (fan and pump load models)	Determined based on the model	●	0xF000
P0-01	1st motor control method	0: Vector control without speed sensor (SVC) 1: Vector control with speed sensor (FVC) 2: V/F control	Determined based on the model	★	0xF001
P0-02	Command Source Selection	0: operating panel command channel (LED off) 1 : Terminal command channel (LED on) 2: Communication command channel (LED blinking)	0	☆	0xF002

Function code	Name	Setting range	Factory value	Change	Modbus address
P0-03	Main frequency source X selection	0: Digital setting (preset frequency P0-08, can be modified by UP/DOWN, in case of power down, it does not memorize) 1:Digital setting (preset frequency P0-08, can be modified by UP/DOWN, in case of power down, it memorizes) 2: AI1 3: AI2 4: AI3 5: PULSE pulse setting (DI5) 6: Multi-segment commands 7: Simple PLC 8: PID 9: Communication given 10: Optical multi-speed frequency	1	★	0xF003
P0-04	Auxiliary frequency source Y range when stacked	Same as P0-03 (main frequency source X selection)	0	★	0xF004
P0-05	Auxiliary frequency source Y range when stacked	0: Relative to maximum frequency 1: Relative to frequency source X	0	☆	0xF005
P0-06	Auxiliary frequency source Y range when stacked	0.0%~300.0%	100.0%	☆	0xF006
P0-07	Frequency source stack selection	Digits: Frequency source selection: 0: Main frequency source X 1: Primary and secondary operation results (operation relationship is determined by the tens digit) 2: Switching between main frequency source X and auxiliary frequency source Y 3: Switching between main frequency source X and main and auxiliary operation results 4: Auxiliary frequency source Y and main and auxiliary operation result switching Tens: Frequency source primary and secondary arithmetic relationships:	00	☆	0xF007

Function code	Name	Setting range	Factory value	Change	Modbus address
		0: primary + secondary 1: Primary - Secondary 2: Maximum of both 3: Minimum value of both			
P0-08	Preset Frequency	0.00Hz~maximum frequency (P0-10)	50.00Hz	☆	0xF008
P0-09	Running direction	0: same direction 1: opposite direction	0	☆	0xF009
P0-10	Maximum frequency	50.0 0Hz~500.0Hz	50.00Hz	★	0xF00A
P0-11	Upper Limit Frequency Source	0: P0- 12 setting 1: AI1 2: AI2 3: AI3 4: PULSE pulse setting 5: Communication given	0	★	0xF00B
P0-12	Upper limit frequency	Lower limit frequency P0-14~ Maximum frequency P0-10	50.00Hz	☆	0xF00C
P0-13	Upper Limit Frequency Bias	0.00Hz~maximum frequency P0-10	0.00Hz	☆	0xF00D
P0-14	Lower limit frequency	0.00Hz~upper limit frequency P0-12	0.00Hz	☆	0xF00E
P0-15	Carrier frequency	0 .5kHz~ 16.0kHz	Determined based on the model	☆	0xF00F
P0-16	Carrier frequency temperature adjustment	0: No 1: Yes	1	☆	0xF010
P0-17	Acceleration time 1	0.00s~650.00s (P0-19=2) 0.0s~6500.0s (P0-19=1) 0s 6500s (P0-19=0)	Determined based on the model	☆	0xF011
P0-18	Deceleration time 1	0.00s~65000s	Determined based on the model	☆	0xF012
P0-19	Acceleration and deceleration time units	0:1 second 1:0.1 second 2:0.01 second	1	★	0xF013

Function code	Name	Setting range	Factory value	Change	Modbus address
P0-21	Auxiliary frequency source bias frequency during superposition	0.00Hz~maximum frequency P0-10	0.00Hz	☆	0xF015
P0-22	Frequency command resolution	1:0.1Hz 2:0.01Hz	2	★	0xF016
P0-23	Digital set frequency memory selection in shutdown	0:No memory 1:Memory	1	☆	0xF017
P0-24	Motor Selection	0:Motor 1 1:Motor 2	0	★	0xF018
P0-25	Acceleration and deceleration time reference frequency	0: Maximum frequency (P0-10) 1: Set frequency 2: 100Hz	0	★	0xF019
P0-26	Runtime frequency command UP/DOWN Baseline	0: Operating frequency 1: Setting frequency	0	★	0xF01A
P0-27	Command Source Bundle Frequency Source	Digits: operating panel command bound frequency source selection 0: No binding 1: Digital setting frequency 2: AI1 3: AI2 4: AI3 5: PULSE pulse setting (DI5) 6: Multi-speed 7: Simple PLC 8: PID 9: Communication given Tens place: Terminal command bound frequency source selection Hundreds place: Communication Command Bound Frequency Source Selection Thousands place: auto run bound	0000	☆	0xF01B

Function code	Name	Setting range	Factory value	Change	Modbus address
		frequency source selection			
P0-28	Communication Expansion Card Type	0: Modbus communication card 1: Bridge communication	0	☆	0xF01C
Group P1 First motor parameters					
P1-00	Motor type selection	0: Normal asynchronous motor 1: Variable frequency asynchronous motors 2: Permanent magnet synchronous motors	Determined based on the model	★	0xF100
P1-01	Motor rated power	0.1kW~1000.0kW	Determined based on the model	★	0xF101
P1-02	Motor rated voltage	1V~2000V	Determined based on the model	★	0xF102
P1-03	Motor rated current	0.01A~655.35A (Inverter power <= 55kW) 0.1A~6553.5A (Inverter power > 55kW)	Determined based on the model	★	0xF103
P1-04	Motor rated frequency	0.01Hz~Maximum Frequency	Determined based on the model	★	0xF104
P1-05	Rated motor speed	1rpm~65535rpm	Determined based on the model	★	0xF105
P1-06	Asynchronous motor stator resistance	0.001Ω~65.535Ω (Inverter power <= 55kW) 0.0001Ω~6.5535Ω (Inverter power > 55kW)	Tuning parameter	★	0xF106
P1-07	Asynchronous motor rotor resistance	0.001Ω~65.535Ω (Inverter power <= 55kW) 0.0001Ω~6.5535Ω (Inverter power > 55kW)	Tuning parameter	★	0xF107
P1-08	Leakage reactance of asynchronous motors	0.01mH~655.35mH (Inverter power <= 55kW) 0.001mH~65.535mH (Inverter power > 55 kW)	Tuning parameter	★	0xF108
P1-09	Asynchronous motor mutual inductive resistance	0.1mH~6553.5mH (Inverter power <= 55kW) 0.01mH~655.35mH (Inverter power > 55kW)	Tuning parameter	★	0xF109

Function code	Name	Setting range	Factory value	Change	Modbus address
P1-10	Asynchronous motor no-load current	0.01A~P1-03 (Inverter power <= 55kW) 0.1A~P1-03 (Inverter power > 55kW)	Tuning parameter	★	0xF10A
P1-16	Synchronous motor stator resistance	0.001Ω~65.535Ω (Drive power <= 55kW) 0.0001Ω~6.5535Ω (Drive power > 55kW)	Tuning parameter	★(E)	0xF110
P1-17	Synchronous motor D-axis inductance	0.01mH~655.35mH (Drive power <= 55kW) 0.001mH~65.535mH (Drive Power > 55kW)	Tuning parameter	★(E)	0xF111
P1-18	Synchronous motor Q-axis inductance	0.01mH~655.35mH (Drive power <=55kW) 0.001mH~65.535mH (Drive power > 55kW)	Tuning parameter	★(E)	0xF112
P1-20	Synchronous motor reverse electromotive force	0.1V~6553.5V	Tuning parameter	★(E)	0xF114
P1-22	Synchronous motor no-load current	0%~180%	5%	★(E)	0xF116
P1-27	Number of encoder lines	1~65535	1024	★	0xF11B
P1-28	Encoder Type	0: ABZ incremental encoder 1: UVW incremental encoder 2: Rotary Transformer 3: Sine-cosine encoder 4: Wire-saving UVW encoder	0	★	0xF11C
P1-30	ABZ Incremental Encoder AB Phase Sequence	0: Forward 1: Reverse	0	★	0xF11E
P1-31	Encoder mounting angle	0.0~359.9°	0.0°	★	0xF11F
P1-32	UVW Encoder UVW Phase Sequence	0: Forward 1: Reverse	0	★	0xF120
P1-33	UVW Encoder Bias Angle	0.0~359.9°	0.0°	★	0xF121
P1-34	Rotary Transformer	1~65535	1	★	0xF122

Function code	Name	Setting range	Factory value	Change	Modbus address
	Pole Pairs				
P1-36	Speed Feedback PG Disconnection Detection Time	0.0s: No action 0.1s~10.0s	0.0	★	0xF124
P1-37	Tuning Options	0: No operation 1: Static tuning of asynchronous motors 2: Complete tuning of asynchronous motors 3: Asynchronous motor stationary complete tuning 11: Synchronous motor static self-learning (E) 12: Synchronous motor no-load dynamic self-learning (E)	0	★	0xF125
Group P2 First motor vector control parameters					
P2-00	Velocity loop proportional gain 1	1~100	30 (E): 20	☆	0xF200
P2-01	Velocity loop integration time1	0.01s~10.00s	0.50s	☆	0xF201
P2-02	Switching frequency 1	0.00~F2-05	5.00Hz	☆	0xF202
P2-03	Velocity loop proportional gain 2	1~100	20 (E): 10	☆	0xF203
P2-04	Velocity loop integration time2	0.01s~10.00s	1.00s	☆	0xF204
P2-05	Switching frequency 2	F2-02~Maximum Frequency	10.00Hz	☆	0xF205
P2-06	Vector Control Differential Gain	50%~200%	100%	☆	0xF206
P2-07	Velocity loop filter time constant	0.000s~1.00s	0.015s	☆	0xF207
P2-09	Torque limit command selection in speed control mode	0: Parameter P2-10 setting 1: AI1 2: AI2 3: AI3 4: Pulse (DI5) 5: Communication given 6: MIN (AI1,AI2)	0	☆	0xF209

Function code	Name	Setting range	Factory value	Change	Modbus address
		7: MAX (AI1,AI2) The full scale range of options 1-7 corresponds to P2- 10.			
P2-10	Digital setting of upper torque limit in speed control mode	0.0%~200.0%	150.0%	☆	0xF20A
P2-11	Torque limit command selection in speed control mode (power generation)	0: Parameter P2-12 setting 1: AI1 2: AI2 3: AI3 4: PULSE Pulse setting 5: Communication given 6: MIN (AI1,AI2) 7: MAX (AI1,AI2) 8: Parameter P2- 12 setting The full scale range of options 1-7 corresponds to P2- 12.	0	☆	0xF20B
P2-12	Digital setting of upper torque limit in speed control mode (power generation)	0.0%~200.0%	150.0%	☆	0xF20C
P2-13	Excitation regulation proportional gain	0~60000	2000	☆	0xF20D
P2-14	Excitation Regulation Integral Gain	0~60000	1300	☆	0xF20E
P2-15	Torque adjustment proportional gain	0~60000	2000	☆	0xF20F
P2-16	Integral gain for torque regulation	0~60000	1300	☆	0xF210
P2-17	Speed Ring Points Properties	0: Valid 1: Invalid	0	☆	0xF211
P2-18	synchronous motor weak magnetic mode	0~2	1	★(E)	0xF212
P2-19	synchronous motor weak magnetic coefficient	1~50	5	☆(E)	0xF213

Function code	Name	Setting range	Factory value	Change	Modbus address
P2-20	Over-modulation voltage factor	100%~110%	105%	☆	0xF214
P2-21	Constant power area torque coefficient	50%~200%	100%	☆	0xF215
P2-23	synchronous motor output voltage saturation margin	0~50%	5%	☆(E)	0xF217
P2-24	Initial position detection current	10%~180%	80%	☆(E)	0xF218
P2-25	Whether the initial position is detected	0~3	1	☆(E)	0xF219
P2-26	Velocity Ring Mode Selection	0~1	0	☆(E)	0xF21A
P2-27	Synchronized machine convex rate adjustment gain	50~500	100	☆(E)	0xF21B
P2-28	Maximum torque to current ratio control enable	0~1	0	☆(E)	0xF21C
P2-29	Feed forward compensation mode	0~2	0	☆(E)	0xF21D
P2-30	Current loop KP during tuning	0~100	6	☆(E)	0xF21E
P2-31	Current loop KI during tuning	0~100	6	☆(E)	0xF21F
P2-32	Z signal correction enable	0~1	1	☆(E)	0xF220

Function code	Name	Setting range	Factory value	Change	Modbus address
P2-33	Synchronous motor SVC speed filter level	210~1000	100	☆(E)	0xF221
P2-34	Synchronous motor SVC speed estimation ratio	5~200	40	☆(E)	0xF222
P2-35	Synchronous motor SVC speed estimation integral	5~500	30	☆(E)	0xF223
P2-36	Synchronous motor SVC initial excitation current	0~150%	30%	☆(E)	0xF224
P2-37	Minimum carrier frequency for synchronous motor SVC	0.8~100.0	1.5	☆(E)	0xF225
P2-38	Low frequency operation mode	0~1	0	☆(E)	0xF226
P2-39	Low frequency in effect	0.00~10.00	2	☆(E)	0xF227
P2-40	Low Frequency Step	0.0001~1.0000	0.001	☆(E)	0xF228
P2-41	Low frequency braking current	30~120	80	☆(E)	0xF229
P2-42	Synchronous motor SVC speed tracking	0~1	0	☆(E)	0xF22A
P2-43	Zero servo enable	0~1	0	☆(E)	0xF22B
P2-44	Switching frequency	0.00~655.35	0.30	☆(E)	0xF22C
P2-45	Zero servo speed loop proportional	1~100	10	☆(E)	0xF22D

Function code	Name	Setting range	Factory value	Change	Modbus address
	gain				
P2-46	Zero servo speed loop integration time	0.01~10.00	0.50	☆(E)	0xF22E
P2-47	Stopping the machine, prohibits reversal	0~1	0	☆(E)	0xF22F
P2-48	Stopping Angle	0.0~10.0	0.8	☆(E)	0xF230
P2-49	On-line tuning enable	0: Close 1: Tuning before powering up for the first run 2: Pre-run tuning	0	☆(E)	0xF231
P2-50	On-line counter electromotive force identification	0: Close 1: Open	0	☆(E)	0xF232
P2-51	Initial position compensatio n angle	0.0~359.9	0.0	☆(E)	0xF233
Group P3 V/F control parameters					
P3-00	V/F curve setting	0: linear V/F 1: Multi-point V/F 2: Square V/F 3: 1.2 times V/F 4: 1.4 times V/F 6: 1.6 times V/F 8: 1.8 times V/F 9: Reservations 10: V/F fully separated mode 11: V/F semi-split mode	0	★	0xF300
P3-01	Torque Increase	0.0%: (automatic torque increase) 0.1%~30.0%	Determined based on the model	☆	0xF301
P3-02	Torque boost cut-off frequency	0.000Hz~max. frequency	50.00Hz	★	0xF302
P3-03	Multi-point V/F frequency point 1	0.00Hz~P3-05	0.00Hz	★	0xF303
P3-04	Multi-point V/F voltage	0.0%~100.0%	0.0%	★	0xF304

Function code	Name	Setting range	Factory value	Change	Modbus address
	point 1				
P3-05	Multi-point V/F frequency point 2	P3-03~P3-07	0.00Hz	★	0xF305
P3-06	Multi-point V/F voltage point 2	0.0%~100.0%	0.0%	★	0xF306
P3-07	Multi-point V/F frequency point 3	P3-05~motor rated frequency (P1-04)	0.00Hz	★	0xF307
P3-08	Multi-point V/F voltage point 3	0.0%~100.0%	0.0%	★	0xF308
P3-09	V/F Differential Compensatio n Gain	0.0%~200.0%	80.0%	☆	0xF309
P3-10	V/F over excitation gain	0~200	64	☆	0xF30A
P3-11	V/F oscillation suppression gain	0~100	Determined based on the model	☆	0xF30B
P3-13	V/ F separated voltage source	0: Digital setting (P3- 14) 1: AI1 2: AI2 3: AI3 4: PULSE pulse setting (DI5) 5: Multi-segment instructions 6: Simple PLC 7: PID 8: Communication given Note: 100.0% corresponds to the rated voltage of the motor.	0	☆	0xF30D
P3-14	Digital setting of the voltage for V/F separation	0V~Motor Rated Voltage	0V	☆	0xF30E
P3-15	Voltage rise time for V/F separation	0.0s~1000.0s Note: Indicates the time for 0V to change to the rated voltage of the motor.	0.0s	☆	0xF30F

Function code	Name	Setting range	Factory value	Change	Modbus address
P3-16	Voltage deceleration time for V/F separation	0.0s~1000.0s Note: Indicates the time for 0V to change to the rated voltage of the motor.	0.0s	☆	0xF310
P3-17	V/F split stop mode	0: Frequency/voltage independently reduced to 0 1: Frequency decreases after voltage decreases to 0	0	☆	0xF311
P3-18	Divergence compensation time constant	0.1s~10.00s	0.50s	☆	0xF312
P3-19	Online torque compensation gain	80%~150%	100%	☆	0xF313
P3-29	Auto Frequency-up Enable	0: Not enabled 1: Enable	0	★	0xF31D
P3-30	Minimum electric torque current	10~100	50	☆	0xF31E
P3-31	Maximum generating torque current	10~100	20	☆	0xF31F
P3-32	Automatic frequency-up KP	0~100	50	☆	0xF320
P3-33	Auto frequency-up KI	0~100	50	☆	0xF321
Group P4 Input terminals					
P4-00	DI1 terminal function selection	0: No function 1: Forward to run FWD or run command 2: Reverse run REV or forward and reverse run direction (Note: When set to 1 or 2, it needs to be used in conjunction with P4-11, please refer to Function Code Parameter Description for details.) 3: Three-wire operation control 4: Forward Jog (FJOG)	1	★	0xF400
P4-01	DI2 terminal function selection		2	★	0xF401
P4-02	DI3 terminal function selection		9	★	0xF402
P4-03	DI4 terminal function selection		12	★	0xF403

Function code	Name	Setting range	Factory value	Change	Modbus address
P4-04	DI5 terminal function selection	5: Reverse Jog (RJOG) 6: Terminal UP 7: Terminal DOWN 8: free stop 9: Fault reset (RESET) 10: Operation pause 11: External fault normal open input 12: Multi-segment command terminal 1 13: Multi-segment command terminal 2 14: Multi-segment command terminal 3 15: Multi-segment command terminal 4 16: Acceleration and deceleration time selection terminal 1 17: Acceleration and deceleration time selection terminal 2 18: Frequency source switching 19: UP/DOWN Setting clear (terminal, keypad) 20: Control command switching terminal 1 21: Acceleration and deceleration disabled 22: PID pause 23: PLC status reset 24: Swing frequency pause 25: Counter input 26: Counter Reset 27: Length Count Inputs 28: Length reset 29: Torque control disabled 30: PULSE frequency input (valid only for DI5) 31: Reserved 32: Immediate DC braking 33: External Fault Normally Closed Input 34: Frequency Modify Enable 35: PID acting direction reversed 36: External stop terminal 1 37: Control command switching terminal 2 38: PID integral pause 39: Frequency source X and preset frequency switching 40: Frequency source Y and preset frequency switching 41: Motor selection terminal 1 42: Motor selection terminal 2 43: PID parameter switching	13	★	0xF404
P4-05	DI6 terminal function selection		0	★	0xF405
P4-06	DI7 terminal function selection		0	★	0xF406
P4-07	DI8 terminal function selection		0	★	0xF407
P4-08	DI9 terminal function selection		0	★	0xF408
P4-09	DI10 terminal function selection		0	★	0xF409

Function code	Name	Setting range	Factory value	Change	Modbus address
		44: User-defined fault 1 45: User-defined faults 2 46: Speed control/torque control switching 47:Emergency stop 48: External stop terminal 2 49: Deceleration DC brake 50: Zeroing of the current run time 51: Two-wire/three-wire switching 52-59: Reservations			
P4-10	DI digital input terminal Filter time	0.000s~1.000s	0.010s	☆	0xF40A
P4-11	Terminal command method	0: 2-wire 1 2: 3-wire 1 1: 2-wire 2 3: 3-wire 2	0	★	0xF40B
P4-12	Terminal UP/DOWN Rate of Change	0.001Hz/s~65.535Hz/s	1.00Hz/s	☆	0xF40C
P4-13	Analog input1 Minimum input	0.00V~P4-15	0.00V	☆	0xF40D
P4-14	Analog input 1 Minimum input setting	-100.0%~+100.0%	0.0%	☆	0xF40E
P4-15	Analog input1 Maximum input	P4-13~+10.00V	10.00V	☆	0xF40F
P4-16	Analog Input 1 Maximum Input Corresponde nce Setting	-100.0%~+100.0%	100.0%	☆	0xF410
P4-17	AI1 filter time	0.00s~10.00s	0.10s	☆	0xF411
P4-18	Analog input 2 Minimum input	0.00V~P4-20	0.00V	☆	0xF412
P4-19	Analog input 2 Minimum input setting	-100.0%~+100.0%	0.0%	☆	0xF413
P4-20	Analog input 2 Maximum input	P4-18~+10.00V	10.00V	☆	0xF414

Function code	Name	Setting range	Factory value	Change	Modbus address
P4-21	Analog Input 2 Maximum Input Corresponde nce Setting	-100.0%~+100.0%	100.0%	☆	0xF415
P4-22	AI2 filter time	0.00s~10.00s	0.10s	☆	0xF416
P4-23	Analog input 3 Minimum input	-10.00V~P4-25	0.5V	☆	0xF417
P4-24	Analog input 3 Minimum input setting	-100.0%~+100.0%	0.0%	☆	0xF418
P4-25	Analog input 3 Maximum input	P4-23~+10.00V	6.6V	☆	0xF419
P4-26	Analog Input 3 Maximum Input Corresponde nce Setting	-100.0%~+100.0%	100.0%	☆	0xF41A
P4-27	AI3 filter time	0.00s~10.00s	0.50s	☆	0xF41B
P4-28	PULSE Minimum Input	0.00kHz~P4-3 0	0.00kHz	☆	0xF41C
P4-29	PULSE Minimum Input Corresponde nce Setting	-100.0%~100.0%	0.0%	☆	0xF41D
P4-30	PULSE Maximum Input	P4-28~100.00kHz	50.00kHZ	☆	0xF41E
P4-31	PULSE Maximum Input Setting	-100.0%~100.0%	100.0%	☆	0xF41F
P4-32	PULSE Filter Time	0.00s~10.00s	0.002s	☆	0xF420

Function code	Name	Setting range	Factory value	Change	Modbus address
P4-33	Analog input curve selection	Digit: AI1 curve selection 1: Curve 1 (2 points, see P4-13 to P4-16) 2: Curve 2 (2 points, see P4-18 to P4-21) 3: Curve 3 (2 points, see P4-23~P4-26) 4: Curve 4 (4 points, see H6-00~H6-07) 5: Curve 5 (4 points, see H6-08 to H6-15) Tens place: AI2 curve selection, same as above Hundred: AI3 curve selection, ditto	321	☆	0xF421
P4-34	Analog input below minimum input setting selection	Bit: AI1 below minimum input setting selection 0: Corresponds to the minimum input setting 1:0.0% Tens place: AI2 below minimum input setting selection, as above Hundreds place: AI3 below minimum input setting selection, as above	000	☆	0xF422
P4-35	DI1 delay time	0.0s~3600.0s	0.0s	★	0xF423
P4-36	DI2 delay time	0.0s~3600.0s	0.0s	★	0xF424
P4-37	DI3 delay time	0.0s~3600.0s	0.0s	★	0xF425
P4-38	DI digital input terminal valid mode selection 1	0: active high 1: Active low Ones place: DI1 Tens place: DI2 Hundreds place: DI3 Thousands place: DI4 Ten-thousands place: DI 5	00000	★	0xF426
P4-39	DI Digital Input Terminal Sub Terminal Valid Mode Selection 2	0: active high 1: Active low Ones place: DI6 Tens place: DI7 Hundredth: DI8 Thousands place: DI9 Ten-thousands place: DI10	00000	★	0xF427
Group P5 Output terminals					
P5-00	FM and AO2 terminal	Ones place: FM terminal function selection	11	☆	0xF500

Function code	Name	Setting range	Factory value	Change	Modbus address
	output mode selection	0: Pulse output 1: Switching output (Expansion card TB4-TC4) Tens place: AO2 terminal function selection 0: Analog output 1: Switching output (Expansion card TB3-TC3)			
P5-01	Relay output function selection (Expansion card TB4-TC4)	0: No output 1: Inverter in operation 2: Fault output (fault for free stop) 3: Frequency level detection FDT1 output 4: Frequency arrival 5: In zero-speed operation (no output at shutdown) 6: Motor overload pre-warning 7: Inverter overload pre-warning 8: Arrival of set notation value 9: Arrival of specified notation value 10: Length reached 11: PLC cycle complete 12: Cumulative runtime reached 13: Frequency limited 14: Torque limit in progress 15: Ready for operation 16: AI1>AI2 17: Upper limit frequency reached 18: Lower frequency limit reached (operationally relevant) 19: Undervoltage status output 20: Communication setting 21: Positioning complete (reserved) 22: Positioning close (reserved) 23: In zero-speed operation 2 (also output during shutdown) 24: Cumulative power-up time reached 25: Frequency level detection FDT2 output 26: Frequency 1 arrival output 27: Frequency 2 arrival output 28: Current 1 arrival output 29: Current 2 arrival output 30: Timing arrival output 31: AI1 input overrun 32: Dropout in progress 33: In reverse operation 34: Zero current state 35: Module temperature reached 36: Output current overrun	0	☆	0xF501
P5-02	Control Board Relay Function Selection (TA1-TB1-TC1)		2	☆	0xF502
P5-03	Relay output function selection (TB2-TC2)		0	☆	0xF503
P5-04	DO1 output function selection		1	☆	0xF504
P5-05	Relay output function selection (Expansion cardTB3-TC3)		4	☆	0xF505

Function code	Name	Setting range	Factory value	Change	Modbus address
		37: Lower frequency limit reached (output even when stopped) 38: Alarm output (all faults) 39: Motor overtemperature pre-warning 40: Arrival of the current running time 41: Non-undervoltage fault output (free stop fault) 45: Holding brake output			
P5-06	FMP output function selection	0: Operating frequency 1: Setting frequency 2: Output current (100.0% corresponds to 2 times the rated motor current) 3: Output torque (absolute value of torque) 4: Output power 5: Output voltage 6: PULSE input (100.0% corresponds to 100.0kHz) 7: AI1 8: AI2 9: AI3 (expansion card) 10: Length 11: Memory value 12: Communication setting 13: Motor speed 14: Output current (100.0% corresponds to 1000.0A) 15: Output voltage (100.0% corresponds to 1000 .0V) 16: Output torque (actual value of torque)	0	☆	0xF506
P5-07	AO1 Output function selection		0	☆	0xF507
P5-08	AO2 Output function selection		1	☆	0xF508
P5-09	FMP Output Maximum Frequency	0.01kHz~100.00kHz	50.00kHz	☆	0xF509
P5-10	AO1 Zero bias factor	-100.0%~+100.0%	0.0%	☆	0xF50A
P5-11	AO1 Gain	-10.00~+10.00	1.00	☆	0xF50B
P5-12	AO2 zero bias factor	-100.0%~+100.0%	0.0%	☆	0xF50C
P5-13	AO2 gain	-10.00~+10.00	1.00	☆	0xF50D
P5-17	PMR output delay time	0.0s~3600.0s	0.0s	☆	0xF511
P5-18	TA1-TB1-TC 1 Output Delay Time	0.0s~3600.0s	0.0s	☆	0xF512
P5-19	TA4-TB4-TC 4 Output	0.0s~3600.0s	0.0s	☆	0xF513

Function code	Name	Setting range	Factory value	Change	Modbus address
	Delay Time				
P5-20	DO1 output delay time	0.0s~3600.0s	0.0s	☆	0xF514
P5-21	DO2 output delay time	0.0s~3600.0s	0.0s	☆	0xF515
P5-22	DO output terminal valid state selection	0: positive logic 1: negative logic Ones place: FMR Tens place: TA1-TB1-TC1 Hundreds place: TA3-TB3-TC3 Thousands place: DO1 (TA2-TB2-TC2) Ten Thousands place: DO2 (TA4-TB4-TC4)	00000	☆	0xF516
P5- 24	FMR delayed shutdown time	0.0s~3600.0s	0.0s	☆	0xF518
P5- 25	TA1-TB1-TC 1 delayed shutdown time	0.0s~3600.0s	0.0s	☆	0xF519
P5- 26	TA4-TB4-TC 4 delayed shutdown time	0.0s~3600.0s	0.0s	☆	0xF51A
P5-27	DO1 delayed shutdown time	0.0s~3600.0s	0.0s	☆	0xF51B
P5-28	DO2 delayed shutdown time	0.0s~3600.0s	0.0s	☆	0xF51C
Group P6 Start-stop control					
P6-00	Activation method	0: Direct start 1: Speed tracking restart 2: Pre-excitation start	0	☆	0xF600
P6-01	Rotation speed tracking method	0: Starting from the stop frequency 1: From zero speed 2: Starting from the maximum frequency 3: Current frequency start, V/F control active	0	★	0xF601
P6-02	RPM tracking fast and slow	1~100	20	☆	0xF602
P6-03	Start-up frequency	0.00Hz~10.00Hz	0.00Hz	☆	0xF603
P6-04	Start-up frequency hold time	0.0s~100.0s	0.0s	★	0xF604

Function code	Name	Setting range	Factory value	Change	Modbus address
P6-05	Starting DC braking current/ Pre-excitation current	0%~100%	0%	★	0xF605
P6-06	Start DC braking time/ Pre-excitation time	0.0s~100.0s	0.0s	★	0xF606
P6-07	Acceleration and deceleration mode	0: Linear acceleration and deceleration 1: S-curve acceleration/deceleration A 2: S-curve acceleration/deceleration B	0	★	0xF607
P6-08	Proportion of time at the beginning of the S-curve	0.0%~(100.0%-P6-09)	30.0%	★	0xF608
P6-09	Proportion of time at the end of the S-curve	0.0%~(100.0%-P6-08)	30.0%	★	0xF609
P6-10	Shutdown mode	0: Decelerate and stop 1: Free stop	0	☆	0xF60A
P6-11	Stopping DC braking start frequency	0.00Hz~Maximum Frequency	0.00Hz	☆	0xF60B
P6-12	Shutdown DC braking wait time	0.0s~100.0s	0.0s	☆	0xF60C
P6-13	Stopping DC braking current	0%~180%	0%	☆	0xF60D
P6-14	Stopping DC braking time	0.0s~100.0s	0.0s	☆	0xF60E
P6-15	Brake utilization rate	0%~100%	100%	☆	0xF60F
P6-16	Brake resistor voltage switch-on point	200.0~2000.0V	Determined based on the model	☆	0xF610
P6-18	Speed tracking current size	30%~200%	Determined based on the model	★	0xF611
P6-19	Speed tracking closed loop current KP	10~1000	500	★	0xF612

Function code	Name	Setting range	Factory value	Change	Modbus address
P6-20	Speed tracking closed loop current KI	5~1000	800	★	0xF613
P6-21	Speed tracking voltage rise time	0~3.0	1.0	★	0xF614
P6-22	Demagnetisation time	0~5.00	1.00	★	0xF615
Group P7 Keyboard and Display					
P7-00	Knob FM resolution selection	0: 0.01Hz 1: 0.1Hz 2: 1Hz 3: 10Hz	2	●	0xF700
P7-01	JOG/QUICK key function selection	0: Menu mode switching 1: Switching between operating panel command channel and remote command channel (terminal command channel or communication command channel) 2: Forward and reverse switching 3: Positive rotation 4: Inverted point movement	3	★	0xF701
P7-02	STOP/RESET key function	0: Only in keypad operation, the STOP/RESET key stops the machine. 1: STOP/ RESET key stop function is active in all operation modes.	1	☆	0xF702
P7-03	LED operating display parameter 1	0000~FFFF Bit00: Operation frequency (Hz) Bit01: Setting frequency (Hz) Bit02: Bus voltage (V) Bit03: Output voltage (V) Bit04: Output current (A) Bit05: Output power (kW) Bit06: Output torque (%) Bit07: DI input state Bit08: DO output state Bit09: AI1 voltage (V) Bit10: AI2 voltage (V) Bit11: AI3 voltage (V) Bit12: Count value Bit11: AI3 voltage (V) Bit12: Count value Bit13: Length value	1F	☆	0xF703

Function code	Name	Setting range	Factory value	Change	Modbus address
		Bit14: Load speed display Bit15: PID setting			
P7-04	LED operating display parameter 2	0000~FFFF Bit00: PID feedback Bit01: PLC stage Bit02: PULSE Input pulse frequency (kHz) Bit03: Operating frequency 2 (Hz) Bit04: Remaining operating time Bit05: AI1 voltage before correction (V) Bit06: AI2 voltage before correction (V) Bit07: Voltage before AI3 correction (V) Bit08: Line speed Bit09: Current power-on time (Hour) Bit10: Current running time (Min) Bit11: PULSE Input pulse frequency (Hz) Bit12: Communication set value Bit13: Encoder feedback speed (Hz) Bit14: Main Frequency X Display (Hz) Bit15: Auxiliary frequency Y display (Hz)	0	☆	0xF704
P7-05	LED stop display parameters	0000~FFFF Bit00: Setting frequency (Hz) Bit01:Bus voltage (V) Bit02: I input status Bit03: DO output status Bit04: AI1 voltage (V) Bit05: AI2 voltage (V) Bit06: AI3 voltage (V) Bit07: Count value Bit08: Length value Bit09: PLC segment Bit10: Load speed Bit11: PID setting Bit12: PULSE input pulse frequency (kHz)	33	☆	0xF705
P7-06	Load Speed Display Factor	0.0001~6.5000	1.0000	☆	0xF706
P7-07	Inverter module heat sink temperature	0.0℃~100.0℃	-	●	0xF707

Function code	Name	Setting range	Factory value	Change	Modbus address
P7-08	Cumulative running time (non-resettable)	0h~65535h	-	●	0xF708
P7-09	Cumulative running time	0h~65535h	-	●	0xF709
P7-10	Product number	-	-	●	0xF70A
P7-11	Software version number	-	-	●	0xF70B
P7-12	Load Speed Display Decimal Digits	20: 0 decimal places 21: 1 decimal place 22: 2 decimal places 23: 3 decimal places	21	☆	0xF70C
P7-13	Cumulative power-up time	0h~65535h	-	●	0xF70D
P7-14	Cumulative power consumption	0kW~65535 degrees	-	●	0xF70E
P7-17	The second row of LEDs displays the parameters	0-16 0: Operating frequency (Hz) 1: Setting frequency (Hz) 2: Bus voltage (V) 3: Output voltage (V) 4: Output current (A) 5: Output power (KW) 6: Output torque (%) 7: DI digital input terminal input status 8: DO output status 9: AI1 voltage (V) 10: AI2 voltage (V) 11: AI3 voltage (V) 12: Count value 13: Length value 14: Load speed display 15: PID setting 16: PID feedback	4	☆	0xF711

Function code	Name	Setting range	Factory value	Change	Modbus address
P7-18	UP/DOWN Effective Variable Display Selection	0: Setting variable 1: Current variables UP/DOWN modification is whether the current display variable is switched to the set variable function.	0	☆	0xF712
Group P8 Auxiliary function parameters					
P8-00	Jog operation frequency	0.00Hz to maximum frequency	2.00Hz	☆	0xF800
P8-01	Jog acceleration time	0.0s~6500.0s	20.0s	☆	0xF801
P8-02	Jog deceleration time	0.0s~6500.0s	20.0s	☆	0xF802
P8-03	Acceleration time 2	0.0s~6500.0s	Determined based on the model	☆	0xF803
P8-04	Deceleration time 2	0.0s~6500.0s	Determined based on the model	☆	0xF804
P8-05	Acceleration time 3	0.0s~6500.0s	Determined based on the model	☆	0xF805
P8-06	Deceleration time 3	0.0s~6500.0s	Determined based on the model	☆	0xF806
P8-07	Acceleration time 4	0.0s~6500.0s	Determined based on the model	☆	0xF807
P8-08	Deceleration time 4	0.0s~6500.0s	Determined based on the model	☆	0xF808
P8-09	Jump Frequency 1	0.00Hz to maximum frequency	0.00Hz	☆	0xF809
P8-10	Jump Frequency 2	0.00Hz to maximum frequency	0.00Hz	☆	0xF80A
P8-11	Hopping	0.00Hz~Maximum Frequency	0.00Hz	☆	0xF80B

Function code	Name	Setting range	Factory value	Change	Modbus address
	frequency amplitude				
P8-12	Forward and reverse dead time	0.0s~3000.0s	0.0s	☆	0xF80C
P8-13	Reverse Control Enable	0: Permitted 1: Prohibition	0	☆	0xF80D
P8-14	Set frequency below lower limit frequency operation mode	0: Operate at the lower frequency limit 1: Shutdown 2: Zero speed operation	0	☆	0xF80E
P8-15	Sag control	0.00Hz~10.00Hz	0.00Hz	☆	0xF80F
P8-16	Setting the cumulative power-up arrival time	0h~65000h	0h	☆	0xF810
P8-17	Setting the cumulative running arrival time	0h~65000h	0h	☆	0xF811
P8-18	Startup Protection Selection	0: No protection 1: Protection	0	☆	0xF812
P8-19	Frequency detection value (FDT1)	0.00Hz~Maximum Frequency	50.00Hz	☆	0xF813
P8-20	Frequency Detection Lag (FDT1)	0.0%~100.0% (FDT1 level)	5.0%	☆	0xF814
P8-21	Frequency Reach Detection Width	0.0%~100.0% (maximum frequency)	0.0%	☆	0xF815
P8-22	Jumps during acceleration and deceleration Are the	0: not valid 1: valid	0	☆	0xF816

Function code	Name	Setting range	Factory value	Change	Modbus address
	frequencies valid?				
P8-25	Frequency point for switching between acceleration time 1 and acceleration time 2	0.00Hz~Maximum Frequency	0.00Hz	☆	0xF819
P8-26	Deceleration time 1 and deceleration time 2 switching frequency points	0.000Hz~max. frequency	0.00Hz	☆	0xF81A
P8-27	Terminal jog priority	0: Invalid 1: Effective 2: Entering deceleration and stopping state after jog is invalid during operation	0	☆	0xF81B
P8-28	Frequency Detection Value (FDT2)	0.00Hz~Maximum Frequency	50.00Hz	☆	0xF81C
P8-29	Frequency detection lag	0.0%~100.0% (FDT2 level)	5.0%	☆	0xF81D
P8-30	Any arrival frequency detection value1	0.00Hz~max. frequency	50.00Hz	☆	0xF81E
P8-31	Arbitrary arrival frequency detection width1	0.0%~100.0% (max. frequency)	0.0%	☆	0xF81F
P8-32	Any Arrival Frequency Detection Value 2	0.000Hz~max. frequency	50.00Hz	☆	0xF820
P8-33	Arbitrary arrival frequency detection width 2	0.0%~100.0% (max. frequency)	0.0%	☆	0xF821

Function code	Name	Setting range	Factory value	Change	Modbus address
P8-34	Zero current detection level	0.0%~300.0% 100.0% corresponds to rated motor current	5.0%	☆	0xF822
P8-35	Zero current detection delay time	0.01s~600.00s	0.10s	☆	0xF823
P8-36	Output current overrun	0.0% (non-detectable) 0.1% 300.0% (motor rated current)	200.0%	☆	0xF824
P8-37	Output current overrun detection delay time	0.00s~600.00s	0.00s	☆	0xF825
P8-38	Arbitrary arrival current 1	0.0%~300.0% (motor rated current)	100.0%	☆	0xF826
P8-39	Arbitrary arrival current 1 width	0.0%~300.0% (motor rated current)	0.0%	☆	0xF827
P8-40	Arbitrary arrival current 2	0.0%~300.0% (motor rated current)	100.0%	☆	0xF828
P8-41	Arbitrary arrival current2 width	0.0%~300.0% (motor rated current)	0.0%	☆	0xF829
P8-42	Timer function selection	0: Invalid 1: Valid	0	☆	0xF82A
P8-43	Timed runtime selection	0: P8-44 setting 1: AI1 2: AI2 3: AI3 (Analog input range 10V corresponds to P8-44)	0	☆	0xF82B
P8-44	Timed Runtime	0.0Min~6500.0Min	0.0Min	☆	0xF82C
P8-45	AI1 Input voltage protection value lower limit	0.00V~P8-46	3.10V	☆	0xF82D
P8-46	AI1 Input voltage protection	P8-45~10.00V	6.80V	☆	0xF82E

Function code	Name	Setting range	Factory value	Change	Modbus address
	value upper limit				
P8-47	Module temperature reaches	0℃~100℃	75℃	☆	0xF82F
P8-48	Cooling Fan Control	0: Fan runs during operation 1: The fan is running continuously, when the temperature exceeds 40℃, the fan will continue to run in the shutdown state.	0	☆	0xF830
P8-52	Busbar voltage display correction factor	0-150%	100%	☆	0xF834
P8-53	Arrival time setting for this run	0.0Min~6500.0Min	0.0Min	☆	0xF835
Group P9 Fault and Protection					
P9-00	Motor overload protection options	0: Prohibited 1: Permitted	1	☆	0xF900
P9-01	Motor overload protection gain	0.20~10.00	1.00	☆	0xF901
P9-02	Motor overload warning factor	50%~100%	80%	☆	0xF902
P9-03	Overvoltage stall gain	0~100	30	☆	0xF903
P9-04	Overvoltage stall protection voltage	200~2000	760	☆	0xF904
P9-05	Overcurrent stall gain	0~100	20	☆	0xF905
P9-06	Overcurrent stall protection	50%~200%	150%	☆	0xF906

Function code	Name	Setting range	Factory value	Change	Modbus address
	current				
P9-07	Powerup to ground short circuit protection selection	Single bit: Power-on short circuit to ground detection 0: Invalid 1: Valid Tens place: short circuit to ground detection before operation 0: Invalid 1: Valid	11	☆	0xF907
P9-08	V/F Weak Magnetic Zone Multiplier Current Limiting Factor	50%~300%	200%	☆	0xF908
P9-09	Failure auto reset times	0~20	0	☆	0xF909
P9-10	During automatic fault reset Fault DO action selection	0: No action 1: Action	0	☆	0xF90A
P9-11	Fault auto reset interval	0.1s~100.0s	1.0s	☆	0xF90B
P9-12	Input phase loss/contactor suction protection selection	Bit: Input phase loss protection selection 0: Prohibited 1: Allowed Tens place: Contactor suction protection selection 0: Prohibited 1: Allowed	11	☆	0xF90C
P9-13	Output out-of-phase protection selection	0: Prohibited 1: Allowed	1	☆	0xF90D
P9-14	Type of first failure	0: No fault 1: Reserved 2: Acceleration overcurrent 3: Deceleration overcurrent 4: Constant speed overcurrent 5: Acceleration overvoltage 6: Deceleration overvoltage 7: Constant speed overvoltage 8: Buffer resistor overload 9: Undervoltage 10: Inverter 11: Motor overload 12: Input phase loss 13: Output phase loss	-	●	0xF90E
P9-15	Second failure type		-	●	0xF90F
P9-16	Third (most recent) Type of fault		-	●	0xF910

Function code	Name	Setting range	Factory value	Change	Modbus address
		14: Module overheating 15: External fault 16: Communication anomalies 17: Contactor Abnormal 18: Current Detection Abnormal 19: Motor tuning abnormality 20: Encoder/PG card abnormality 21: Parameter reading/writing abnormality 22: Inverter hardware abnormality 23: Motor shorted to ground 24: Reserved 25: Reserved 26: Runtime reached 27: User-defined fault 1 28: User-defined fault 2 29: Power-up time reached 30: Load shedding 31: Loss of PID feedback during operation 40: Fast current limit timeout 41: Switching motor during operation 42: Excessive speed deviation 43: Motor overspeed 45: Motor overtemperature 51: Initial position error			
P9-17	Frequency at third (most recent) failure	-	-	●	0xF911
P9-18	Current at third (latest) failure	-	-	●	0xF912
P9-19	Busbar voltage at third (latest) fault	-	-	●	0xF913
P9-20	Input Terminal Status at Third (Latest) Failure	-	-	●	0xF914
P9-21	Output Terminal Status at Third (Latest) Failure	-	-	●	0xF915

Function code	Name	Setting range	Factory value	Change	Modbus address
P9-22	Inverter status at third (most recent) failure	-	-	●	0xF916
P9-23	Power-up time at third (most recent) failure	-	-	●	0xF917
P9-24	Runtime at third (most recent) failure	-	-	●	0xF918
P9-27	Frequency at second failure	-	-	●	0xF91B
P9-28	Current at second fault	-	-	●	0xF91C
P9-29	Busbar voltage at second fault	-	-	●	0xF91D
P9-30	Input terminal status at second fault	-	-	●	0xF91E
P9-31	Output terminal status at second fault	-	-	●	0xF91F
P9-32	Inverter status at second fault	-	-	●	0xF920
P9-33	Power-up time at second failure	-	-	●	0xF921
P9-34	Running time at second failure	-	-	●	0xF922
P9-37	Frequency at first failure	-	-	●	0xF925
P9-38	Current at first fault	-	-	●	0xF926

Function code	Name	Setting range	Factory value	Change	Modbus address
P9-39	Busbar voltage at first fault	-	-	●	0xF927
P9-40	Input terminal status at first fault	-	-	●	0xF928
P9-41	Output terminal status at first fault	-	-	●	0xF929
P9-42	Inverter status at first fault	-	-	●	0xF92A
P9-43	Power-up time at first failure	-	-	●	0xF92B
P9-44	Running time at first failure	-	-	●	0xF92C
P9-47	Fail-safe action selection 1	Position: Motor overload (11) 0: Free stop 1: Shutdown by stopping mode 2: Continue to run Tens place: Input out of phase (12) Hundreds place: Output out of phase (13) Thousands place: External faults (15) Ten-thousands place: Communication anomalies (16)	00000	☆	0xF92F
P9-48	Fail-safe action selection 2	Ones place: Encoder/PG card exception (20) 0: Free stop 1: Shutdown by stopping mode 2: Continue to run Tens place: Function code read/write abnormality (21) Hundreds place: reserved Thousands place: Motor overheating (25) Ten-thousands place: Running time arrival (26)	00000	☆	0xF930
P9-49	Fail-safe action selection 3	Ones place: user-defined fault 1 (27) 0: Free stop 1: Shutdown by stopping mode 2: Continue to run	00000	☆	0xF931

Function code	Name	Setting range	Factory value	Change	Modbus address
		Tens place: User-defined fault 2 (28) Hundreds place: power-up time arrives (29) Thousands place: no-load operation (30) 0: Free stop 1: Decelerate and stop 2: Reduce the speed to 7% of the rated frequency of the motor and continue running. If there is no no-load operation, it will automatically return to the set frequency for operation Ten-thousands place: Loss of PID feedback during operation (31) 0: Free stop 1: Shutdown by stopping mode 2: Continue to run			
P9-50	Fail-safe action selection 4	Ones place: excessive speed deviation (42) 0: Free stop 1: Shutdown by stopping mode 2: Continue to run Tens place: Motor overspeed (43) Hundreds place: Initial position error (51)	00000	☆	0xF932
P9-54	Frequency selection for continued operation in case of failure	0: Running at the current operating frequency 1: Operation at set frequency 2: Operation at upper frequency limit 3: Operating at the lower frequency limit 4: Operation at abnormal standby frequency	0	☆	0xF936
P9-55	Abnormal Standby Frequency	00.0%~100.0% (100.0% corresponds to maximum frequency P0-10)	100.0%	☆	0xF937
P9-56	Motor Temperature Sensor Type	0: No temperature sensor 1: PT100 2: PT1000	0	☆	0xF938
P9-57	Motor overheating protection threshold	0℃~200℃	110℃	☆	0xF939
P9-58	Motor overheating pre-warning threshold	0℃~200℃	90℃	☆	0xF93A

Function code	Name	Setting range	Factory value	Change	Modbus address
P9-59	Instantaneous blackout action selection	0: Invalid 1: Decelerate 2: Decelerate and stop	0	☆	0xF93B
P9-60	Instantaneous stop action pause judgement voltage	80.0%~100.0%	85.0%	☆	0xF93C
P9-61	Instantaneous outage voltage recovery judgement time	0.00s~100.00s	0.50s	☆	0xF93D
P9-62	Instantaneous blackout action judgement voltage	60.0%~100.0% (standard bus voltage)	80.0%	☆	0xF93E
P9-63	Load shedding protection options	0: Invalid 1: Valid	0	☆	0xF93F
P9-64	Dropout detection level	0.0~100.0%	10.0%	☆	0xF940
P9-65	Load Drop Detection Time	0.0~60.0s	1.0s	☆	0xF941
P9-67	Over speed detection value	0.0% to 50.0% (max. frequency)	20.0%	☆	0xF942
P9-68	Over-speed detection time	0.0s~60.0s	1.0s	☆	0xF943
P9-69	Excessive speed deviation detection value	0.0%~50.0% (max. frequency)	20.0%	☆	0xF944
P9-70	Excessive speed deviation detection Time	0.0s~60.0s	5.0s	☆	0xF945
P9-74	V/F	5Hz~50Hz	5Hz	☆	0xF949

Function code	Name	Setting range	Factory value	Change	Modbus address
	overvoltage suppression rise frequency				
P9-75	Initial position fault enable	Ones place: initial position fault 0: Off 1: Enable Tens place: angular tuning fault with load zero position 0: Off 1: Enable	11	☆ (E)	0xF94A
P9-78	Initial position identification initial pulse width time	5~2000	20	☆ (E)	0xF94D
Group PA PID function					
PA-00	PID given source	0: PA-01 setting 1: AI1 2: AI2 3: AI3 4: PULSE Pulse Setting (DI5) 5: Communication Giving 6: Multi-segment command feed 7: Keyboard encoder	0	☆	0xFA00
PA-01	PID value given	0.0%~100.0%	50.0%	☆	0xFA01
PA-02	PID Feedback Source	0: AI1 1: AI2 2: AI3 3: AI1-AI2 4: PULSE pulse setting (DI5) 5: Communication setting 6: AI1+AI2 7: MAX (|AI1|, |AI2|) 8: MIN (|AI1|, |AI2|)	0	☆	0xFA02
PA-03	Direction of PID action	0: positive 1: negative	0	☆	0xFA03
PA-04	PID feedback range	0~65535	1000	☆	0xFA04
PA-05	Proportional gain Kp1	0.0~100.0	20.0	☆	0xFA05
PA-06	Integration time Ti1	0.01s~10.00s	2.00s	☆	0xFA06
PA-07	Differential time Td1	0.000s~10.000s	0.000s	☆	0xFA07
PA-08	PID inversion cut-off frequency	0.00~Maximum Frequency	0.00Hz	☆	0xFA08
PA-09	PID Deviation Limit	0.0%~100.0%	0.0%	☆	0xFA09
PA-10	PID differential	0.00%~100.00%	0.10%	☆	0xFA0A

Function code	Name	Setting range	Factory value	Change	Modbus address
	limiting				
PA-11	PID given change time	0.00~650.00s	0.00s	☆	0xFA0B
PA-12	PID feedback filtering time	0.00~60.00s	0.00s	☆	0xFA0C
PA-13	PID output filter time	0.00~60.00s	0.00s	☆	0xFA0D
PA-14	Number of decimal places for pressure setting and feedback	1: 1 bit 2: 2 bits	1	☆	0xFA0E
PA-15	Proportional gain Kp2	0.0~100.0	20.0	☆	0xFA0F
PA-16	Integration time Ti2	0.01s~10.00s	2.00s	☆	0xFA10
PA-17	Differential time Td2	0.000s~10.000s	0.000s	☆	0xFA11
PA-18	PID parameter switching conditions	0: No switching 1: Switching via DI terminal 2: Automatic switching according to deviation	0	☆	0xFA12
PA-19	PID parameter switching deviation1	0.0%~PA-20	20.0%	☆	0xFA13
PA-20	PID parameter switching deviation2	PA-19~100.0%	80.0%	☆	0xFA14
PA-21	PID initial value	0.0%~100.0%	0.0%	☆	0xFA15
PA-22	PID initial value holding time	0.00~650.00s	0.00s	☆	0xFA16
PA-23	Deviation of the two outputs towards the maximum value	0.00%~100.00%	1.00%	☆	0xFA17
PA-24	Two output deviation inverse max.	0.00%~100.00%	1.00%	☆	0xFA18

Function code	Name	Setting range	Factory value	Change	Modbus address
PA-25	PID Integral Properties	Individual: Integral separation 0: Invalid 1: Valid Tens place: whether to stop integrating after the output reaches the limit value 0: Continue to count 1: Stop counting	00	☆	0xFA19
PA-26	PID feedback loss detection value	0.0%: no judgement feedback loss 0.1%~100.0%	0.0%	☆	0xFA1A
PA-27	PID feedback loss detection time	0.0s~20.0s	0.0s	☆	0xFA1B
PA-28	PID stopping operation	0: No operation during shutdown 1: Operation during shutdown	0	☆	0xFA1C
PA-29	PID Sampling Time	0~10	1	☆	0xFA1D
PA-30	PID feed-forward compensatio n gain	0~5000	0	☆	0xFA1E
PA-31	PID feed-forward compensatio n lower limit frequency	0.00Hz~P0-10 (max. frequency)	5.00Hz	☆	0xFA1F
PA-32	PID power-up delay disconnection detection time	0.0s~200.0s	8.0s	☆	0xFA20
PA-33	Frequency of stop holding brake operation	0.00Hz~P0-12 (upper limit frequency)	1.50Hz	☆	0xFA21
PA-34	Holding brake action delay time s	0.0s~200.0s	5.0s	☆	0xFA22
Group Pb Swing frequency, fixed length and counting					
Pb-00	Oscillation Frequency Setting Method	0: Relative to the centre frequency 1: Relative to the maximum frequency	0	☆	0xFb00
Pb-01	Swing amplitude	0.0%~100.0%	0.0%	☆	0xFb01
Pb-02	Burst frequency amplitude	0.0%~50.0%	0.0%	☆	0xFb02

Function code	Name	Setting range	Factory value	Change	Modbus address
Pb-03	Oscillation period	0.1s~3000.0s	10.0s	☆	0xFb03
Pb-04	Triangular wave rise of the swing frequency Time	0.1%~100.0%	50.0%	☆	0xFb04
Pb-05	Setting length	0m~65535m	1000m	☆	0xFb05
Pb-06	Actual length	0m~65535m	0m	☆	0xFb06
Pb-07	Pulses per metre	0.1~6553.5	100.0	☆	0xFb07
Pb-08	Setting the count value	1~65535	1000	☆	0xFb08
Pb-09	Specify count value	1~65535	1000	☆	0xFb09
Group PC Multi-segment instruction, simple PLC					
PC-00	Multi-segment instruction 0	-100.0%~100.0%	0.0%	☆	0xFC00
PC-01	Multi-segment instruction 1	-100.0%~100.0%	0.0%	☆	0xFC01
PC-02	Multi-segment instruction 2	-100.0%~100.0%	0.0%	☆	0xFC02
PC-03	Multi-segment instruction 3	-100.0%~100.0%	0.0%	☆	0xFC03
PC-04	Multi-segment instruction 4	-100.0%~100.0%	0.0%	☆	0xFC04
PC-05	Multi-segment instruction 5	-100.0%~100.0%	0.0%	☆	0xFC05
PC-06	Multi-segment instruction 6	-100.0%~100.0%	0.0%	☆	0xFC06
PC-07	Multi-segment instruction 7	-100.0%~100.0%	0.0%	☆	0xFC07
PC-08	Multi-segment instruction 8	-100.0%~100.0%	0.0%	☆	0xFC08
PC-09	Multi-segment instruction 9	-100.0%~100.0%	0.0%	☆	0xFC09
PC-10	Multi-segment instruction 10	-100.0%~100.0%	0.0%	☆	0xFC0A
PC-11	Multi-segment instruction 11	-100.0%~100.0%	0.0%	☆	0xFC0B
PC-12	Multi-segment instruction	-100.0%~100.0%	0.0%	☆	0xFC0C

Function code	Name	Setting range	Factory value	Change	Modbus address
	12				
PC-13	Multi-segment instruction 13	-100.0%~100.0%	0.0%	☆	0xFC0D
PC-14	Multi-segment instruction 14	-100.0%~100.0%	0.0%	☆	0xFC0E
PC-15	Multi-segment instruction 15	-100.0%~100.0%	0.0%	☆	0xFC0F
PC-16	Simple PLC operation method	0: Shutdown at the end of a single run 1: End of single run holds final value 2: Continuous loop	0	☆	0xFC10
PC-17	Simple PLC Power-down Memory Selection	Bit: Power-down memory selection 0: No memory for power down 1: Memory for power down Tens place: Stop memory selection 0: No shutdown memory 1: Shutdown memory	00	☆	0xFC11
PC-18	Simple PLC segment 0th runtime	0.0s (h)~6553.5s (h)	0.0s (h)	☆	0xFC12
PC-19	Simple PLC 0th Acceleration and Deceleration Time Selection	0~3	0	☆	0xFC13
PC-20	Simple PLC 1st runtime	0.0s (h)~6553.5s (h)	0.0s (h)	☆	0xFC14
PC-21	Simple PLC 1st Acceleration/ Deceleration Time Selection	0~3	0	☆	0xFC15
PC-22	Simple PLC 2nd stage operation	0.0s (h)~6553.5s (h)	0.0s (h)	☆	0xFC16

Function code	Name	Setting range	Factory value	Change	Modbus address
PC-23	Simple PLC 2nd stage acceleration/ deceleration time selection	0~3	0	☆	0xFC17
PC-24	Simple PLC segment 3rd run time	0.0s (h)~6553.5s (h)	0.0s (h)	☆	0xFC18
PC-25	Simple PLC 3rd stage acceleration/ deceleration time selection	0~3	0	☆	0xFC19
PC-26	Simple PLC segment 4th runtime	0.0s (h)~6553.5s (h)	0.0s (h)	☆	0xFC1A
PC-27	Simple PLC 4th stage acceleration/ deceleration time selection	0~3	0	☆	0xFC1B
PC-28	Simple PLC segment 5th runtime	0.0s (h)~6553.5s (h)	0.0s (h)	☆	0xFC1C
PC-29	Simple PLC 5th Acceleration/ Deceleration Time Selection	0~3	0	☆	0xFC1D
PC-30	Simple PLC segment 6th runtime	0.0s (h)~6553.5s (h)	0.0s (h)	☆	0xFC1E
PC-31	Simple PLC 6th Acceleration/ Deceleration Time Selection	0~3	0	☆	0xFC1F
PC-32	Simple PLC segment 7th runtime	0.0s (h)~6553.5s (h)	0.0s (h)	☆	0xFC20

Function code	Name	Setting range	Factory value	Change	Modbus address
PC-33	Simple PLC 7th Acceleration/ Deceleration Time Selection	0~3	0	☆	0xFC21
PC-34	Simple PLC segment 8th runtime	0.0s (h)~6553.5s (h)	0.0s (h)	☆	0xFC22
PC-35	Simple PLC Segment 8th Acceleration and Deceleration Time Selection	0~3	0	☆	0xFC23
PC-36	Simple PLC segment 9th runtime	0.0s (h)~6553.5s (h)	0.0s (h)	☆	0xFC24
PC-37	Simple PLC Segment 9th Acceleration and Deceleration Time Selection	0~3	0	☆	0xFC25
PC-38	Simple PLC 10th runtime	0.0s (h)~6553.5s (h)	0.0s (h)	☆	0xFC26
PC-39	Simple PLC 10th Acceleration/ Deceleration Time Selection	0~3	0	☆	0xFC27
PC-40	Simple PLC 11th runtime	0.0s (h)~6553.5s (h)	0.0s (h)	☆	0xFC28
PC-41	Simple PLC 11th Acceleration/ Deceleration Time Selection	0~3	0	☆	0xFC29
PC-42	Simple PLC 12th runtime	0.0s (h)~6553.5s (h)	0.0s (h)	☆	0xFC2A
PC-43	Simple PLC 12th Acceleration/ Deceleration	0~3	0	☆	0xFC2B

Function code	Name	Setting range	Factory value	Change	Modbus address
	Time Selection				
PC-44	Simple PLC 13th runtime	0.0s (h)~6553.5s (h)	0.0s (h)	☆	0xFC2C
PC-45	Simple PLC 13 Acceleration and Deceleration Time Selection	0~3	0	☆	0xFC2D
PC-46	Simple PLC 14th runtime	0.0s (h)~6553.5s (h)	0.0s (h)	☆	0xFC2E
PC-47	Simple PLC 14th Acceleration/ Deceleration Time Selection	0~3	0	☆	0xFC2F
PC-48	Simple PLC 15th runtime	0.0s (h)~6553.5s (h)	0.0s (h)	☆	0xFC30
PC-49	Simple PLC 15th Acceleration/ Deceleration Time Selection	0~3	0	☆	0xFC31
PC-50	Simple PLC Runtime Unit	0: s (seconds) 1: h (hours)	0	☆	0xFC32
PC-51	Multi-segment instruction 0 given way	0: Function code PC-00 given 1: AI1 2: AI2 3: AI3 4: PULSE pulse 5: PID 6: Preset frequency (P0-08) is given, can be modified by UP/DOWN.	0	☆	0xFC33
PC-52	Multi-speed preference	0: No priority 1: Priority	0	☆	0xFC34
PC-53	Multi-band speed frequency unit selection	0:% 1:Hz	1	☆	0xFC35
Group PD Communication parameters					
Pd-00	Baud	Ones place: MODBUS 0: 300 BPS 1: 600 BPS	5005	☆	0xFd00

Function code	Name	Setting range	Factory value	Change	Modbus address
		2: 1200 BPS 3: 2400 BPS 4: 4800 BPS 5: 9600 BPS 6: 19,200 BPS 7: 38,400 BPS 8: 57,600 BPS 9: 115,200 BPS Tens place: ProPibus-DP 0: 115,200 BPS 1: 208,300 BPS 2: 256,000 BPS 3: 512,000 BPS Hundreds place: reserved Thousands place: CANlink baud rate 0: 20k 1: 50k 2: 100k 3: 125k 4: 250k 5: 500k 6: 1M			
Pd-01	Data format	0: No parity (8-N-2) 1: Even parity (8-E-1) 2: Odd check (8-O-1) 3: 8-N-1	0	☆	0xFd01
Pd-02	Local address	1~247, 0 is the broadcast address	1	☆	0xFd02
Pd-03	Latency of reply	0ms~20ms	2	☆	0xFd03
Pd-04	Communication timeout	0.0 (invalid), 0.1s~60.0s	0.0	☆	0xFd04
Pd-05	Data transfer format selection	Digits: MODBUS 0: Non-standard MODBUS protocols 1: Standard MODBUS protocol 2: Non-standard MODBUS protocol (write commands without replying to the host) Tens place: ProPibus-DP 0: PFO1 format 1: PFO2 format 2: PFO3 format 3: PFO5 format	31	☆	0xFd05

Function code	Name	Setting range	Factory value	Change	Modbus address
Pd-06	Communication reading current resolution	0:0.01A 1:0.1A	0	☆	0xFd06
Pd-08	Canlink communication timeout	0.0s: invalid 0.1~60.0s	0	☆	0xFd08
Group PE User-customized function codes					
PE-00	User function code 0	uP0-00~uPP-xx uH0-00~uHF-xx uU0-00~uU3-xx	uU3-17	☆	0xFd01
PE-01	User function code 1		uU3-16	☆	0xFd02
PE-02	User function code 2		uP0-00	☆	0xFd03
PE-03	User function code 3		uP0-00	☆	0xFd04
PE-04	User function code 4		uP0-00	☆	0xFd05
PE-05	User function code 5		uP0-00	☆	0xFd06
PE-06	User function code 6		uP0-00	☆	0xFd08
PE-07	User function code 7		uP0-00	☆	0xFd01
PE-08	User function code 8		uP0-00	☆	0xFd02
PE-09	User function code 9		uP0-00	☆	0xFd03
PE-10	User function code 10		uP0-00	☆	0xFd04
PE-11	User function code 11		uP0-00	☆	0xFd05
PE-12	User function code 12		uP0-00	☆	0xFd06
PE-13	User function code 13		uP0-00	☆	0xFd08
PE-14	User function		uP0-00	☆	0xFd01

Function code	Name	Setting range	Factory value	Change	Modbus address
	code 14				
PE-15	User function code 15		uP0-00	☆	0xFd02
PE-16	User function code 16		uP0-00	☆	0xFE10
PE-17	User function code 17		uP0-00	☆	0xFE11
PE-18	User function code 18		uP0-00	☆	0xFE12
PE-19	User function code 19		uP0-00	☆	0xFE13
PE-20	User function code 20		uU0-68	☆	0xFE14
PE-21	User function code 21		uU0-69	☆	0xFE15
PE-22	User function code 22		uP0-00	☆	0xFE16
PE-23	User function code 23		uP0-00	☆	0xFE17
PE-24	User function code 24		uP0-00	☆	0xFE18
PE-25	User function code 25		uP0-00	☆	0xFE19
PE-26	User function code 26		uP0-00	☆	0xFE1A
PE-27	User function code 27		uP0-00	☆	0xFE1B
PE-28	User function code 28		uP0-00	☆	0xFE1C
PE-29	User function code 29		uP0-00	☆	0xFE1D
PE-30	User function code 30		uP0-00	☆	0xFE1E
PE-31	User function code 31		uP0-00	☆	0xFE1F
Group PP Function Code Management					
PP-00	User password	0~65535	0	☆	0x1F00

Function code	Name	Setting range	Factory value	Change	Modbus address
PP-01	Parameter initialization	0: No operation 01: Restore factory parameters, excluding motor parameters 02: Clearing of recorded information 04: Restore User Backup Parameters 501: Backup user's current parameters	0	★	0x1F01
PP-02	Function Parameter group display selection	Digits: Group U display selection 0: Not displayed 1: Displayed Tens place: Group A display selection 0: Not displayed 1: Displayed	11	★	0x1F02
PP-03	Individual Parameter Group Display Options	Digits: user-customized parameter group display selection 0: not displayed 1: displayed Tens place: User change parameter group display selection 0: Not displayed 1: Displayed	00	☆	0x1F03
PP-04	Function Code Modification Properties	0: Modifiable 1: Non-modifiable	0	☆	0x1F04
PP-05	Model Setting	1: G-type machine 2: P-type machine	1	★	0x1F05
Group H0 Torque control parameters					
H0-00	Speed/torque control method Selection	0: Speed control 1: Torque control	0	★	0xA000
H0-01	Torque setting source selection in torque control mode	0: Digital setting (H0-03) 1: AI1 2: AI2 3: AI3 4: PULSE pulse 5: Communication given 6: MIN (AI1, AI2) 7: MAX (AI1, AI2) (Full scale for options 1-7, corresponding to H0-03 digital settings)	0	★	0xA001
H0-03	Digital setting of torque in torque control mode	-200.0%~200.0%	150.0%	☆	0xA003
H0-05	Torque control forward	0.000Hz~max. frequency	50.00Hz	☆	0xA005

Function code	Name	Setting range	Factory value	Change	Modbus address
	maximum frequency				
H0-06	Torque control reverse maximum frequency	0.000Hz~max. frequency	50.00Hz	☆	0xA006
H0-07	Torque controlled acceleration time	0.00s~65000s	0.00s	☆	0xA007
H0-08	Torque controlled deceleration time	0.00s~65000s	0.00s	☆	0xA008
Group H1 Virtual IO					
H1-00	Virtual VDI1 Terminal Function	0~59	0	★	0xA100
H1-01	Virtual VDI2 Terminal Functions	0~59	0	★	0xA101
H1-02	Virtual VDI3 Terminal Features	0~59	0	★	0xA102
H1-03	Virtual VDI4 Terminal Function Options	0~59	0	★	0xA103
H1-04	Virtual VDI5 Terminal Function Options	0~59	0	★	0xA104
H1-05	Virtual VDI Terminal Status Setting Mode	0: VS is active or inactive depending on the state of the virtual VDO x. 1: VS validity is set by function code H1-06. Digits: Virtual VDI1 Ten: Virtual VDI2 Hundreds place: Virtual VDI3 Thousands place: virtual VDI4 Ten-thousands place: virtual VDI5	00000	★	0xA105
H1-06	Virtual VDI Terminal Status	0: Invalid 1: Effective Digits: Virtual VDI1	00000	★	0xA106

Function code	Name	Setting range	Factory value	Change	Modbus address
	Settings	Ten: Virtual VDI2 Hundreds place: Virtual VDI3 Thousands place: virtual VDI4 Ten-thousands place: virtual VDI5			
H1-08	Function selection when the AI2 terminal is used as a digital input terminal	0~59	0	★	0xA108
H1-09	Function selection when the AI3 terminal is used as a digital input terminal	0~59	0	★	0xA109
H1-10	Effective mode selection when Analog signal terminals are used as digital inputs	0: Active high 1: Active low Ones place: AI1 Tens place: AI2 Hundreds place: AI3	000	★	0xA10A
H1-11	Virtual VDO1 output function selection	0: Internal short to physical S x 1~40: See Physical DO Output Selection in Group P5	0	☆	0xA10B
H1-12	Virtual VDO2 output function selection	0: Internal short to physical S x 1~40: See Physical DO Output Selection in Group P5	0	☆	0xA10C
H1-13	Virtual VDO3 output function selection	0: Internal short to physical S x 1~40: See Physical DO Output Selection in Group P5	0	☆	0xA10D
H1-14	Virtual VDO4 output function selection	0: Internal short to physical S x 1~40: See Physical DO Output Selection in Group P5	0	☆	0xA10E
H1-15	Virtual VDO5 output function selection	0: Internal short to physical S x 1~40: See Physical DO Output Selection in Group P5	0	☆	0xA10F
H1-16	VDO1 Output Delay Time	0.0s~3600.0s	0.0s	☆	0xA110

Function code	Name	Setting range	Factory value	Change	Modbus address
H1-17	VDO2 Output Delay Time	0.0s~3600.0s	0.0s	☆	0xA111
H1-18	VDO3 Output Delay Time	0.0s~3600.0s	0.0s	☆	0xA112
H1-19	VDO4 Output Delay Time	0.0s~3600.0s	0.0s	☆	0xA113
H1-20	VDO5 Output delay time	0.0s~3600.0s	0.0s	☆	0xA114
H1-21	VDO output terminal valid state selection	0: Positive logic 1: Anti-logic Ones place: VDO1 Tens place: VDO2 Hundreds place: VDO3 Thousands place: VDO4 Ten-thousands place: VDO5	00000	☆	0xA115
Group H2 Second motor control					
H2-00	Motor type selection	0: Ordinary asynchronous motor 1: Variable frequency asynchronous motor	0	★	0xA200
H2-01	Motor rated power	0.1kW~1000.0kW	Determined based on the model	★	0xA201
H2-02	Motor rated voltage	1V~2000V	Determined based on the model	★	0xA202
H2-03	Motor rated current	0.01A~655.35A (Drive power <= 55kW) 0.1A~6553.5A (drive power > 55kW)	Determined based on the model	★	0xA203
H2-04	Motor rated frequency	0.01Hz~Maximum Frequency	Determined based on the model	★	0xA204
H2-05	Rated motor speed	1rpm~65535rpm	Determined based on the model	★	0xA205
H2-06	Asynchronous motor stator resistance	0.001Ω~65.535Ω (Drive power <= 55kW) 0.0001Ω~6.5535Ω (Drive power > 55kW)	Determined based on the model	★	0xA206
H2-07	Asynchronous motor rotor resistance	0.001Ω~65.535Ω (Drive power <= 55kW) 0.0001Ω~6.5535Ω (Drive power > 55kW)	Determined based on the model	★	0xA207
H2-08	Leakage reactance of asynchronous motors	0.01mH~655.35mH (Drive power <= 55kW) 0.001mH~65.535mH (Drive power > 55kW)	Determined based on the model	★	0xA208

Function code	Name	Setting range	Factory value	Change	Modbus address
H2-09	Asynchronous motor mutual inductive resistance	0.1mH~6553.5mH (drive power <= 55kW) 0.01mH~655.35mH (drive power > 55kW)	Determined based on the model	★	0xA209
H2- 10	Asynchronous motor no-load current	0.01A~H2-03 (drive power <= 55kW) 1A~H2-03 (Drive power > 55kW)	Determined based on the model	★	0xA20A
H2-16	Synchronous motor stator resistance	0.001Ω~65.535Ω (Drive power <= 55kW) 0.0001Ω~6.5535Ω (Drive power > 55kW)	Tuning parameter	★ (E)	0xA210
H2-17	Synchronous motor D-axis inductance	0.01mH~655.35mH (Drive power <= 55kW) 0.001mH~65.535mH (Drive power > 55kW)	Tuning parameter	★ (E)	0xA211
H2-18	Synchronous motor Q-axis inductance	0.01mH~655.35mH (Drive power <= 55kW) 0.001mH~65.535mH (Drive power > 55kW)	Tuning parameter	★ (E)	0xA212
H2-20	Synchronous motor reverse electromotive force	0.1V~6553.5V	Tuning parameter	★ (E)	0xA214
H2-22	Synchronous motor no-load current	0%~180%	5%	★ (E)	0xA216
H2-27	Number of encoder lines	1~65535	1024	★	0xA21B
H2-28	Encoder Type	0: ABZ incremental encoder 1: UVW incremental encoder 2: Rotary Transformer 3: Sine-cosine encoder 4: Wire-saving method UVW encoder	0	★	0xA21C
H2-29	Speed Feedback PG Selection	0: Local PG 1: Extended PG 2: PULSE pulse input (DI5)	0	★	0xA21D
H2-30	ABZ Incremental Encoder AB Phase Sequence	0: Positive 1: Reverse	0	★	0xA21E
H2-31	Encoder mounting angle	0.0~359.9°	0.0°	★	0xA21F
H2-32	UVW	0: Positive	0	★	0xA220

Function code	Name	Setting range	Factory value	Change	Modbus address
	Encoder UVW Phase Sequence	1: Reverse			
H2-33	UVW Encoder Bias Angle	0.0~359.9°	0.0°	★	0xA221
H2-34	Rotary Transformer Pole Pairs	1~65535	1	★	0xA222
H2-36	Speed Feedback PG Break Detection Time	0.0: No action 0.1s~10.0s	0.0	★	0xA224
H2-37	Tuning Options	0: No operation 1: Static tuning of asynchronous motors 2: Complete tuning of asynchronous motors 3: Asynchronous motor stationary complete tuning 11: Synchronous motor static self-learning (E) 12: Synchronous motor no-load dynamic self-learning (E)	0	★	0xA225
H2-38	Velocity loop proportional gain 1	1~100	30	☆	0xA226
H2-39	Velocity loop integration time 1	0.01s~10.00s	0.50s	☆	0xA227
H2-40	Switching frequency 1	0.00~H2-43	5.00Hz	☆	0xA228
H2-41	Velocity loop proportional gain 2	1~100	20	☆	0xA229
H2-42	Velocity loop integration time 2	0.01s~10.00s	1.00s	☆	0xA22A
H2-43	Switching frequency 2	H2-40~Maximum Frequency	10.00Hz	☆	0xA22B
H2-44	Vector Control Differential Gain	50%~200%	100%	☆	0xA22C
H2-45	Velocity loop filter time constant	0.000s~0.100s	0.050s	☆	0xA22D
H2-46	Vector control overexcitation gain	0~200	64	☆	0xA22E

Function code	Name	Setting range	Factory value	Change	Modbus address
H2-47	Upper torque limit source in speed control mode	0: H2-48 setting 1: AI1 2: AI2 3: AI3 4: PULSE pulse 5: Communication given 6: MIN (AI1, AI2) 7: MAX (AI1, AI2) 1-7 options of full scale, corresponding to H2-48 digital settings	0	☆	0xA22F
H2-48	Digital setting of upper torque limit in speed control mode	0.0%~200.0%	150.0%	☆	0xA230
H2-51	Excitation regulation proportional gain	0~20000	2000	☆	0xA233
H2-52	Excitation Regulation Integral Gain	0~20000	1300	☆	0xA234
H2-53	Torque adjustment proportional gain	0~20000	2000	☆	0xA235
H2-54	Integral gain for torque regulation	0~20000	1300	☆	0xA236
H2-55	Speed Ring Points Properties	Digit: Integral separation 0: Invalid 1: Valid	0	☆	0xA237
H2-61	2nd motor control method	0: Open loop vector 1: Closed-loop vector 2: V/F control	2	★	0xA23D
H2-62	2nd motor acceleration and deceleration time selection	0: Same as 1st motor 1: Increase Deceleration Time 1 2: Acceleration and deceleration time 2 3: Acceleration and deceleration time 3 4: Acceleration and deceleration time 4	0	☆	0xA23E
H2-63	2nd Motor Torque Boost	0.0%: Automatic torque increase 0.1%~30.0%	Determined based on the model	☆	0xA23F
H2-65	2nd motor oscillation suppression	0~100	Determined based on the model	☆	0xA241

Function code	Name	Setting range	Factory value	Change	Modbus address
	gain				
H2-66	Weak magnetic depth	0~50	5	☆ (E)	0xA242
H2-67	Initial position detection current	10%~180%	80%	☆ (E)	0xA243
H2-68	Whether the initial position is detected	0~3	1	☆ (E)	0xA244
H2-69	Velocity Ring Mode Selection	0~1	0	☆ (E)	0xA245
H2-70	Convexity adjustment factor	50~500	100	☆ (E)	0xA246
H2-71	Maximum torque to current ratio control enable	0~1	0	☆ (E)	0xA247
H2-72	Feedforward compensatio n mode	0~2	0	☆ (E)	0xA248
H2-73	Current loop KP during tuning	0~100	6	☆ (E)	0xA249
H2-74	Current loop KI during tuning	0~100	6	☆ (E)	0xA24A
H2-75	Z signal correction enable	0~1	1	☆ (E)	0xA24B
H2-76	Synchronous motor SVC speed filter level	10~1000	100	☆ (E)	0xA24C
H2-77	Synchronous motor SVC speed estimation proportional gain	5~200	40	☆ (E)	0xA24D
H2-78	Synchronous motor SVC Speed Estimation Integral Gain	5~500	30	☆ (E)	0xA24E
H2-79	Synchronous motor SVC	0~150	30	☆ (E)	0xA24F

Function code	Name	Setting range	Factory value	Change	Modbus address
	initial excitation current limit				
H2-80	Minimum carrier frequency for synchronous motor SVC	0.8~100.0	1.5	☆ (E)	0xA250
H2-81	Low frequency operation mode	0~1	0	☆ (E)	0xA251
H2-82	Low frequency in effect	0.00~10.00	2	☆ (E)	0xA252
H2-83	Low Frequency Step	0.0001~1.0000	0.001	☆ (E)	0xA253
H2-84	Low frequency braking current	30~120	80	☆ (E)	0xA254
H2-85	Synchronous motor SVC speed tracking	0~1	0	☆ (E)	0xA255
H2-86	Zero servo enable	0~1	0	☆ (E)	0xA256
H2-87	Switching frequency	0.00~655.35	0.30	☆ (E)	0xA257
H2-88	Zero servo speed loop proportional gain	1~100	10	☆ (E)	0xA258
H2-89	Zero servo speed loop integration time	0.01~10.00	0.50	☆ (E)	0xA259
H2-90	Stopping the machine, prohibits reversal	0~1	0	☆ (E)	0xA25A
H2-91	Stopping Angle	0.0~10.0	0.8	☆ (E)	0xA25B
Group H5 Control optimization parameters					
H5-00	DPWM switching upper limit frequency	0.00Hz~(P0-10)	8.00Hz	☆	0xA500

Function code	Name	Setting range	Factory value	Change	Modbus address
H5-01	PWM modulation mode	0: Asynchronous modulation 1: Synchronous modulation	0	☆	0xA501
H5-02	Dead zone compensation mode selection	0: No compensation 1: Compensation mode 1 2: Compensation mode 2	1	☆	0xA502
H5-03	Random PWM depth	0: Random PWM invalid 1~10: PWM carrier frequency random depth	0	☆	0xA503
H5-04	Fast Current Limit Enable	0: not enabled 1: enabled	1	☆	0xA504
H5-05	Current Detection Compensation	0~100	0	☆	0xA505
H5-06	Undervoltage point setting	60.0%~140.0%	350	☆	0xA506
H5-07	0HZ output function selection	0: No output 1:Normal output 2:DC braking (braking current P6-13)	1	☆	0xA507
H5-08	Dead zone time adjustment	100%~200%	150%	☆	0xA508
H5-09	Overvoltage point setting	200.0V~2000.0V	Determined based on the model	☆	0xA509
Group H6 Analog curve input setting					
H6-00	Analog inputs 4 Minimum input	-10.00V~H6-02	0.00V	☆	0xA600
H6-01	Analog input 4 Minimum input setting	-100.0%~+100.0%	0.0%	☆	0xA601
H6-02	Analog inputs 4 Inflection point 1 input	H6-00~H6-04	3.00V	☆	0xA602
H6-03	Analog input 4 Corresponding setting for inflection point 1 input	-100.0%~+100.0%	30.0%	☆	0xA603
H6-04	Analog inputs 4 Inflection point 2 inputs	H6-02~H6-06	6.00V	☆	0xA604

Function code	Name	Setting range	Factory value	Change	Modbus address
H6-05	Analog input 4 Corresponding setting for inflection point 2 inputs	-100.0%~+100.0%	60.0%	☆	0xA605
H6-06	Analog inputs 4 Maximum input	H6-06~+10.00V	10.00V	☆	0xA606
H6-07	Analog input 4 Maximum input setting	-100.0%~+100.0%	100.0%	☆	0xA607
H6-08	Analog inputs 5 Minimum input	-10.00V~H6-10	-10.00V	☆	0xA608
H6-09	Analog input 5 Minimum input setting	-100.0%~+100.0%	-100.0%	☆	0xA609
H6-10	Analog inputs 5 Inflection point 1 input	H6-08~H6-12	-3.00V	☆	0xA60A
H6-11	Analog input 5 Corresponding setting of inflection point 1 input	-100.0%~+100.0%	-30.0%	☆	0xA60B
H6-12	Analog inputs 5 Inflection point 2 input	H6-10~H6-14	3.00V	☆	0xA60C
H6-13	Analog Input 5 Corresponding setting for inflection point 2 inputs	-100.0%~+100.0%	30.0%	☆	0xA60D
H6-14	Analog inputs 5 Maximum input	H6-12~+10.00V	10.00V	☆	0xA60E
H6-15	Analog input 5 Maximum input setting	-100.0%~+100.0%	100.0%	☆	0xA60F
H6-24	AI1 Setting the jump point	-100.0%~100.0%	0.0%	☆	0xA618
H6-25	AI1 sets the jump range	0.0%~10.0%	0.5%	☆	0xA619
H6-26	AI2 Setting the jump point	-100.0%~100.0%	0.0%	☆	0xA61A

Function code	Name	Setting range	Factory value	Change	Modbus address
H6-27	AI2 sets the jump range	0.0%~100.0%	0.5%	☆	0xA61B
H6-28	AI3 Setting the jump point	-100.0%~100.0%	0.0%	☆	0xA61C
H6-29	AI3 sets the jump range	0.0%~100.0%	0.5%	☆	0xA61D
Group H8 Point-to-Point Communication					
H8-00	Point-to-point communication function options	0: Invalid 1: Effective	0	☆	0xA800
H8-01	Master-slave control	0: Mainframe 1: Slave	0	☆	0xA801
H8-02	Slave commands follow master-slave message interactions	Bit: Slave command follow 0: Slave does not follow host run command run 1: Slaves follow the master to run the command run Tens place: Slave fault message transmission 0: Slave fault message not transmitted 1: Slave fault information transmission Hundreds place: Host shows slave down 0: Slave drop host does not report faults 1: Slave dropped host reports fault (ERR-16)	11	☆	0xA802
H8-03	Slave receive data role selection	0: Host operating frequency 1: Host target frequency	0	☆	0xA803
H8-04	Received data zero bias (torque)	-100.00%~100.00%	0%	☆	0xA804
H8-05	Receive Data Gain	-10.00~100.00	1.00	★	0xA805
H8-06	Point-to-point communication interruption	0.0s~10.0s	0	☆	0xA806

Function code	Name	Setting range	Factory value	Change	Modbus address
	detection time				
H8-07	Peer-to-peer communication host data sending cycle	0.001s~10.000s	0.050s	☆	0xA807
H8-08	Frequency receive data zero bias	-100.00~100.00	0.00	☆	0xA808
H8-09	Frequency Receive Data Gain	-10.00~10.00	1.00	☆	0xA809
H8-10	Maximum forward deviation of slave frequency	0.00~100.00	10.00	☆	0xA80A
H8-11	Maximum deviation of slave frequency reversal	0.2%~10.00%	0.5%	☆	0xA80B
Group H9 Sleep Wake-up function parameters					
H9-00	Sleep call on	0: Sleep function disabled Controls the hibernate function 1: By PID set value and feedback value 2: Control the Sleep function according to the operating frequency	0	☆	0xA900
H9-01	Sleeping frequency	0.00Hz~P0-10	20.00Hz	☆	0xA901
H9-02	Sleep delay	0.0s~3600.0s	5.0s	☆	0xA902
H9-03	Wake-up call difference	0.0%~100.0%	10.0%	☆	0xA903
H9-04	Wake-up delay	0.0s~3600.0s	3.0s	☆	0xA904
H9-05	Frequency mode selection	0: PID output 1: Sleep frequency output	0	☆	0xA905

Function code	Name	Setting range	Factory value	Change	Modbus address
	during sleep delay				
Group HA Brake parameter group					
HA-00	Holding brake control enable selection:	0: Disable 1: Enable	0	★	0xAA00
HA-01	Holding brake release frequency	0.00Hz~20.00Hz	2.50Hz	☆	0xAA01
HA-02	Holding brake release frequency maintenance time	0.0s~20.0s	1.0s	☆	0xAA02
HA-03	Current limit value during holding	50.0%~200.0%	120.0%	☆	0xAA03
HA-04	Clamping frequency	0.00Hz~20.00Hz	1.50Hz	☆	0xAA04
HA-05	Holding brake suction delay time	0.0s~20.0s	0.0s	☆	0xAA05
HA-06	Holding frequency maintenance time	0.0s~20.0s	1.0s	☆	0xAA06
HA-07	Loosening torque current detection value	0.0%~100.0%	12.0%	☆	0xAA07
Group HC Analog Input and Output Calibration					
HC-00	AI1 measured voltage 1	0.500V~4.000V	Factory calibration	☆	0xAC00
HC-01	AI1 displays voltage 1	0.500V~4.000V	Factory calibration	☆	0xAC01
HC-02	AI1 measured voltage 2	6.000V~9.999V	Factory calibration	☆	0xAC02
HC-03	AI1 display voltage 2	6.000V~9.999V	Factory calibration	☆	0xAC03
HC-04	AI2 measured voltage 1	0.500V~4.000V	Factory calibration	☆	0xAC04
HC-05	AI2 display voltage 1	0.500V~4.000V	Factory calibration	☆	0xAC05
HC-06	AI2 measured voltage 2	6.000V~9.999V	Factory calibration	☆	0xAC06

Function code	Name	Setting range	Factory value	Change	Modbus address
HC-07	AI2 display voltage 2	6.000V~9.999V	Factory calibration	☆	0xAC07
HC-08	AI3 measured voltage 1	-9.999V~10.000V	Factory calibration	☆	0xAC08
HC-09	AI3 display voltage 1	-9.999V~10.000V	Factory calibration	☆	0xAC09
HC-10	AI3 measured voltage 2	-9.999V~10.000V	Factory calibration	☆	0xAC0A
HC-11	AI3 display voltage 2	-9.999V~10.000V	Factory calibration	☆	0xAC0B
HC-12	AO1 Target voltage 1	0.500V~4.000V	Factory calibration	☆	0xAC0C
HC-13	AO1 measured voltage 1	0.500V~4.000V	Factory calibration	☆	0xAC0D
HC-14	AO1 Target voltage 2	6.000V~9.999V	Factory calibration	☆	0xAC0E
HC-15	AO1 measured voltage 2	6.000V~9.999V	Factory calibration	☆	0xAC0F
HC-16	AO2 target voltage 1	0.500V~4.000V	Factory calibration	☆	0xAC10
HC-17	AO2 measured voltage 1	0.500V~4.000V	Factory calibration	☆	0xAC11
HC-18	AO2 target voltage 2	6.000V~9.999V	Factory calibration	☆	0xAC12
HC-19	AO2 measured voltage 2	6.000V~9.999V	Factory calibration	☆	0xAC13
L0 Application macro function selection					
L0-00	Application Macro Selection	0: General settings 1: Special setup for constant pressure water supply 2: Grinder-specific settings 3: Machine-specific settings 7: Dedicated setup for upward-facing spot stop	0	☆	0xB000

7.2 Summary table of monitoring parameters

Group U0 Basic monitoring parameters			
Function code	**Name**	**Minimum unit**	**Correspondence address**
U0-00	Operating frequency (Hz)	0.01Hz	0x7000
U0-01	Setting frequency (Hz)	0.01Hz	0x7001
U0-02	Busbar voltage (V)	0.1V	0x7002
U0-03	Output Voltage (V)	1V	0x7003
U0-04	Output Current (A)	0.01A	0x7004
U0-05	Output power (KW)	0.1kW	0x7005
U0-06	Output torque (%)	0.1%	0x7006
U0-07	DI digital input terminal input status	1	0x7007
U0-08	DO output status	1	0x7008
U0-09	AI1 Voltage (V)	0.01V	0x7009
U0-10	AI2 Voltage (V)	0.01V	0x700A
U0-11	AI3 Voltage (V)	0.01V	0x700B
U0-12	Numerical value	1	0x700C
U0-13	Length value	1	0x700D
U0-14	Load speed display	1	0x700E
U0-15	PID Setting	1	0x700F
U0-16	PID feedback	1	0x7010
U0-17	PLC stage	1	0x7011
U0-18	PULSE Input Pulse Frequency (Hz)	0.01kHz	0x7012
U0-19	Feedback speed (in 0.1Hz)	0.1Hz	0x7013
U0-20	Remaining running time	0.1Min	0x7014
U0-21	AI1 voltage before correction	0.001V	0x7015
U0-22	AI2 voltage before correction	0.001V	0x7016
U0-23	AI3 voltage before correction	0.001V	0x7017
U0-24	Linear velocity	1m/Min	0x7018
U0-25	Current power-up time	1Min	0x7019
U0-26	Current Runtime	0.1Min	0x701A
U0-27	PULSE Input Pulse Frequency	1Hz	0x701B

U0-28	Communication set value	0.01%	0x701C
U0-29	Encoder feedback speed	0.01Hz	0x701D
U0-30	Mains frequency X display	0.01Hz	0x701E
U0-31	Auxiliary frequency Y display	0.01Hz	0x701F
U0-32	View any memory address value	1	0x7020
U0-33	Synchronous motor rotor position	0.1°	0x7021
U0-34	Motor temperature value	1℃	0x7022
U0-35	Target torque (%)	0.1%	0x7023
U0-36	Position of rotating transformer	1	0x7024
U0-37	Power factor angle	0.1°	0x7025
U0-38	ABZ position	1	0x7026
U0-39	V/F separation target voltage	1V	0x7027
U0-40	V/F separation output voltage	1V	0x7028
U0-41	DI digital input terminal input status visual display	1	0x7029
U0-42	Visual display of DO input status	1	0x702A
U0-43	DI digital input terminal function status visual display 1 (Function 01 - Function 40)	1	0x702B
U0-44	DI digital input terminal function status visual display 2 (Function 41 - Function 80)	1	0x702C
U0-45	Fault information	1	0x702D
U0-59	Setting frequency (%)	0.01%	0x703B
U0-60	Operating frequency (%)	0.01%	0x703C
U0-61	Drive status	1	0x703D
U0-62	Current fault	1	0x703E

Chapter 8 Parameter Description

Group P0 Basic Function Group

P0-00	GP Type Display		Factory value	Model-related
	Setting range	1	G Model (Constant Torque Load Model)	
		2	P model (fan and pump load models)	

This parameter is for the user to view the factory model only and cannot be changed.

1: For constant torque loads with specified rated parameters

2: For variable torque loads with specified rated parameters (fan, pump loads)

P0-01	First Motor control method		Factory value	2
	Setting range	0	Vector Control without speed sensor (SVC)	
		1	Vector control with speed sensor (FVC)	
		2	V/F control	

0: Vector control without speed sensor

Refers to open-loop vector control, which is suitable for the usual high-performance control situations where one drive can only drive one motor. Such loads as machine tools, centrifuges, wire drawing machines, injection moulding machines, etc.

1: Vector control with speed sensor

Refers to closed-loop vector control, an encoder must be added to the motor end, and the drive must be equipped with a PG card of the same type as the encoder. It is suitable for high precision speed control or torque control. One drive can only drive one motor. Such as high-speed paper machinery, lifting machinery, lifts and other loads.

2: V/F control

It is suitable for the occasions which do not have high requirements on the load, or one driver drags multiple motors, such as fans, pumps loads. It can be used in occasions where one driver drags several motors.

Hint: When selecting a vector control method, a motor parameter identification process must be carried out. The advantages of vector control can only be realized if the motor parameters are accurate. Better performance can be achieved by adjusting the speed controller parameter P2 group function code (group H2 for 2nd motor).

For permanent magnet synchronous motors, generally choose to vector control with speed sensor, in some small power motor applications, it can also choose V/F control and does not support the permanent magnet synchronous motor vector control without speed sensor

P0-02	Command Source Selection		Factory value	0
	Setting range	0	Operating panel command channel (LED off)	
		1	Terminal command channel (LED on)	
		2	Communication command channel (LED flashing)	

Select the input channel for drive control commands.

Drive control commands include: Start, Stop, Forward, Reverse, and Jog.

0: Operating panel command channel;

Operation commands are controlled by the RUN and STOP/RESET buttons on the operation panel.

1: Terminal command channel;

Operation commands are controlled from the multi-function input terminals FWD, REV, JOGF, JOGR, etc.

2: Communication command channel

The running command is given by the host computer through communication, supporting Modbus host computer communication.

This series of drive control board comes with non-isolated RS485 communication interface, in the case of communication distance is shorter or interference is not strong, you can directly use the machine control board comes with the communication interface. If the communication distance is long or the interference is strong, the Modbus communication card must be equipped.

Control commands are written via address 0x2000. For the control command definition, refer to Appendix I: Communication Address Definition.

	Command Source X Selection		Factory value	1
P0-03	Setting range	0	Digital setting (preset frequency P0-08, UP/DOWN can be modified, no memory for power down)	
		1	Digital setting (preset frequency P0-08, UP/DOWN modifiable, power down memory)	
		2	AI1	
		3	AI2	
		4	AI3 (keypad potentiometer)	
		5	Pulse setting (DI5)	
		6	Multi-segment instruction	
		7	PLC	
		8	PID	
		9	Communication protocol	
		10	Optical Multi-Speed Frequency	

Select the input channel for the drive's master set frequency. There are a total of 10 channels for the master set frequency:

0: Digital setting (no memory for power down)

The initial value of the set frequency is the value of P0-08 "Preset Frequency". The ▲ and ▼ keys of the keypad (or the multi-function input terminal) can be used to set the initial value of the frequency.

(UP, DOWN) to change the set frequency value of the driver.

After the drive is powered down and powered up again, the set frequency value is restored to the P0-08 "Digital Setting Preset Frequency" value.

1: Digital setting (power-down memory)

The initial value of the set frequency is the value of P0-08 "Preset Frequency". The initial value of the frequency can be set using the ▲ and ▼ keys of the keypad (or the ▲ and ▼ keys of the multi-function input terminal).

(UP, DOWN) to change the set frequency value of the drive.

When the drive is powered down and powered up again, the set frequency is the set frequency at the last power down moment, and the correction amount is memorized by the keypad ▲, ▼ keys or terminal UP, DOWN.

It shall be reminded that P0-23 is "Digital Setting Frequency Shutdown Memory Selection", P0-23 is used to select whether the frequency correction is memorized or cleared when the drive is shut down. P0-23 is related to shutdown, not power-down memory, so be careful when applying it.

2: AI1

3: AI2

4: AI3 (keypad potentiometer)

The finger frequency is determined by the Analog input terminals. The HV320S series control boards provide two Analog input terminals (AI1, AI2) of which:

AI1 is a 0V~10V voltage type input.

AI2 can be 0V~10V voltage input or 4mA~20mA current input, selected by J8 jumper on the control board.

AI3 is the keypad potentiometer input.

The input voltage values of AI1, AI2 and AI3, and the corresponding curves to the target frequency, can be freely selected by the user.

HV320S series provides 5 sets of correspondence curves, 3 sets of curves are linear (2-point correspondence) and 2 sets of curves are arbitrary curves with 4-point correspondence, which can be set by users through P4-13~P4-27 function codes and H6 group function codes.

Function code P4-33 is used to set which one of the 5 sets of curves is selected for each of the three Analog inputs AI1~AI3.

The Analog input terminals are used as frequency feed time, the voltage/current input corresponds to 100.0% of the setting, which is a percentage relative to the maximum frequency P0-10.

5: Pulse Definition (DI5)

The frequency is given by a high-speed pulse at terminal DI5.

Specifications of pulse setting signal: voltage range 9V~30V, frequency range 0kHz~100kHz. Pulse feed can only be input from multi-function input terminal DI5.

The relationship between the input pulse frequency at DI5 terminal and the corresponding setting is set by P4-28 to P4-31. The correspondence is a 2-point linear correspondence, and 100.0% of the setting corresponding to the pulse input is the percentage relative to the maximum frequency P0-10.

6. Multi-segment instruction

When selecting the multi-segment command operation mode, it is necessary to combine different states of the digital input DI terminals to correspond to different set frequency papers.

You can set up 4 multi-segment command terminals (Terminal Function 12~15), 16 states of the 4 terminals can be corresponded to any 16 "multi-segment commands" by PC group function codes, and "multi-segment commands" is the percentage of the relative maximum frequency P0-10.

When the digital input S terminal functions as a multi-section instruction terminal, it needs to be set accordingly in P4 group, for details, please refer to the relevant function parameter description of P4 group.7. When the frequency source of simple PLC is simple PLC, the operating frequency source of the drive can be switched to run between 1~16 arbitrary frequency instructions, and the holding time and respective acceleration/deceleration time of 1~16 frequency instructions can be set by the user, and the frequency source can be switched to run between 1~16 arbitrary frequency instructions, the holding time and respective acceleration/deceleration time of 1~16 frequency instructions can be set by the user. For details, refer to the relevant instructions of PC group.

8: PID

Selects the output of the process PID control as the operating frequency. Generally used for process closed loop control in the field, e.g. constant pressure closed loop control, constant tension closed-loop control and other occasions.

To use PID as the frequency source, you need to set the parameters related to the "PID Function" of the PA group.

9: Communication given

Means that the frequency is given by the communication method.

10: Optical multi-speed frequency

Indicates that the frequency is given by the optoelectronic multi-stage speed method, pulse is valid, and is related to the PC parameter groups PC-00, PC-01, and PC-02.

	Command Source Y Select		Factory value	0
P0-04	Setting range	0	Digital setting (preset frequency P0-08, UP/ DOWN can be modified, no memory for power down)	
		1	Digital setting (preset frequency P0-08, UP/DOWN modifiable, power down memory)	
		2	AI1	
		3	AI2	
		4	AI3	
		5	Pulse setting (DI5)	
		6	Multi-segment instruction	
		7	PLC	
		8	PID	
		9	Communication protocol	
		10	Optical Multi-Speed Frequency	

When the auxiliary frequency source is used as a stand-alone frequency feed channel (i.e., the frequency source selection is switched from X to Y), it is used in the same way as the main frequency source X. Refer to P0-03 for instructions on how to use it.

When the auxiliary frequency source is used as a superposition of the frequency source (i.e., the main frequency source X and auxiliary frequency source Y are compounded to achieve the frequency setting), it shall be noted that:

1. When the auxiliary frequency source is a digital feeder, the preset frequency (P0-08) does not play a role, and the user can use the keypad's ▲, ▼, ▼, and ▼ to select the frequency source. Frequency adjustment by key (or UP, DOWN of multi-function input terminals) is directly based on the main given frequency.

2. When the auxiliary frequency source is given by Analog input (AI1, AI2, AI3) or pulse input, 100% of the corresponding auxiliary frequency source range of the input setting can be set by P0-05 and P0-06.

3. The frequency source is pulse input feed time, similar to Analog feed time.

Tip: Auxiliary frequency source Y selection and main frequency source X selection cannot be set to the same channel, i.e., P0-03 and P0-04 shall not be set to the same value, otherwise it will easily cause confusion.

P0-05	Auxiliary Frequency Source Y Range Selection for Stacking		Factory value	0
	Setting range	0	Relative to maximum frequency	
		1	Relative to the main frequency source X	

P0-06	Auxiliary frequency source Y range when stacked		Factory value	0
	Setting range	0.0%~300.0%		

These two parameters are used to determine the adjustment range of the auxiliary frequency source when the frequency source is selected as "Frequency Overlay".

P0-05 is used to determine the object to which the auxiliary frequency source range corresponds. It can be selected relative to the maximum frequency or relative to the main frequency source X. If it is selected as relative to the main frequency source, the range of the auxiliary frequency source will change with the main frequency X.

P0-07	Frequency source stack selection		Factory value	0
	Setting range	Ones place	Frequency source selection	
		0	Main frequency source X	
		1	Primary and secondary operation results (operation relationship is determined by the tens digit)	
		2	Primary frequency source X is switched with secondary frequency source Y.	
		3	Switching between main frequency source X and main and auxiliary operation results	
		4	Auxiliary frequency source Y switches with the main and auxiliary results.	
		Tens place	Frequency Source Primary and Secondary Arithmetic Relationships	
		0	Primary + Secondary	
		1	Primary - Secondary	
		2	Maximum value of both	
		3	Least value of both	

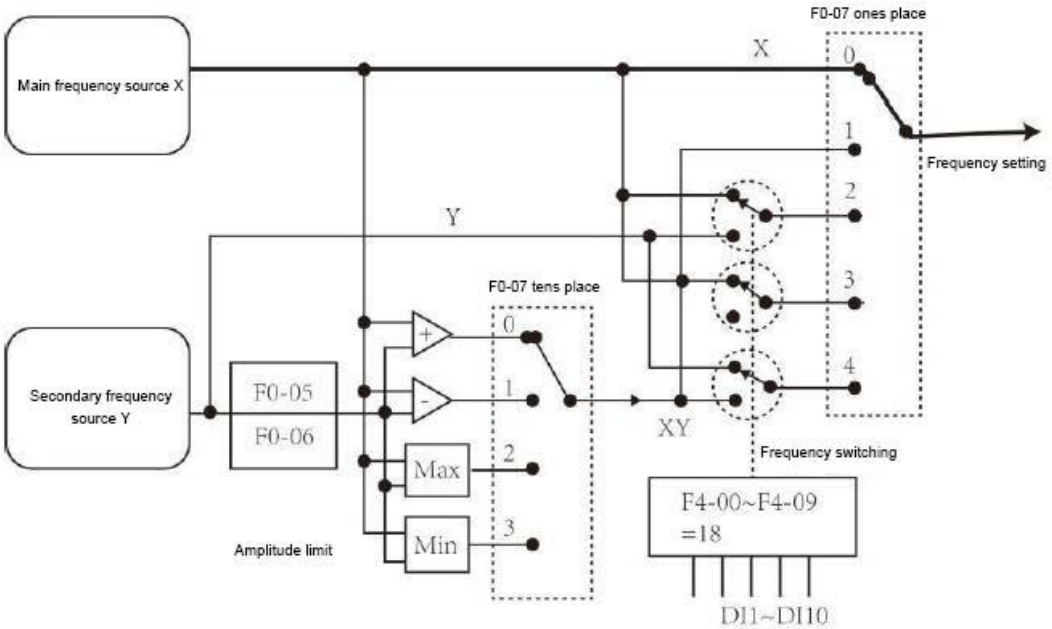

This parameter selects the frequency feed channel. Frequency giving is realized by the compounding of the main frequency source X and the auxiliary frequency source Y. When the frequency source is selected as the main and auxiliary operation, the bias frequency can be set via P0-21 to superimpose the bias frequency on the main and auxiliary operation results to flexibly respond to various needs.

P0-08	Preset Frequency	Factory value	50Hz
	Setting range	0.00~Maximum frequency (valid for digital setting of frequency source selection method)	

When "DIGITAL SET" or "TERMINAL UP/DOWN" is selected for the frequency source, the function code value is the initial digital setting of the drive's frequency.

P0-09	Running direction		Factory value	0
	Setting range	0	Same direction	
		1	Opposite direction	

By changing this function code, the purpose of changing the direction of motor rotation can be achieved without changing the motor wiring. Its function is equivalent to adjusting any two lines of the machine (U, V, W) to achieve the conversion of motor rotation direction.

Tip: The motor running direction will be restored to its original state after the parameters are initialized. Be cautious when using in situations where changing the direction of the motor is strictly prohibited after system debugging.

P0-10	Maximum frequency	Factory value	50Hz
	Setting range	50.00Hz~500.0Hz	

Pulse input (DI5) and multi-segment commands are calibrated at 100.0% relative to P0-10 when used as frequency sources. The frequency can be up to 500 Hz, and the number of decimal places of the frequency command can be selected by P0-22 in order to take into account both the resolution of the frequency command and the frequency input range.

P0-11	Upper Frequency Source		Factory value	0
	Setting range	0	P12 Setting	
		1	AI1	
		2	AI2	
		3	AI3	
		4	PULSE setting (DI5)	
		5	Communication Settings	

Defines the source of the upper limit frequency. The upper limit frequency can come from a digital setting (P0-12), from an Analog input, from a PULSE setting, or from a communication given.

When using Analog AI1, AI2, AI3 settings, PULSE settings (DI5) or communication settings, similar to the main frequency source, see introduction P0-03.

For example, when torque control is used in the winding control site, in order to avoid the phenomenon of "flying car" when the material breaks the line, the upper limit frequency can be set by Analog, and when the drive runs to the upper limit frequency value, the drive will keep running at the upper limit frequency.

P0-12	Upper frequency	Factory value	50Hz
	Setting range	Lower limit frequency P0- 14~P0- 10	

Setting upper limit frequency, setting range P0- 14~P0- 10

P0-13	Upper Frequency Bias	Factory value	50Hz
	Setting range	0.00Hz~upper frequency P0-12	

When the upper limit frequency source is set to Analog or PULSE setting, P0- 13 serves as a bias for the set value, and this bias frequency is superimposed with the P0-11 set upper limit frequency value as the final upper limit frequency set value.

P0-14	Lower frequency	Factory value	50Hz
	Setting range	0.00Hz~upper frequency P0-12	

When the frequency command falls below the lower limit frequency set by P0-14, the drive can shut down, run at the lower limit frequency, or run at zero speed, and the operation mode to be used can be set by P8-14 (Setting Frequency Below Lower Limit Frequency Operation Mode).

P0-15	Carrier frequency	Factory value	Model-related
	Setting range	0 .5KHZ~16.0KHZ	

This function adjusts the carrier frequency of the drive. By adjusting the carrier frequency, it can reduce the motor noise, avoid the resonance point of the mechanical system, reduce the leakage current of the line to ground and reduce the interference generated by the driver.

When the carrier frequency is low, the high harmonic component of the output current increases, the motor losses increase and the motor temperature rise increases.

When the carrier frequency is higher, motor losses decrease and motor temperature rise decreases, but drive losses increase, drive temperature rise increases, and interference increases. Adjusting the carrier frequency will have an effect on the following performance:

Carrier frequency	Low	→	High
Motor noise	Large	→	Small
Output current waveform	Poor	→	Good
Motor temperature rise	High	→	Low
Drive Temperature Rise	Low	→	High
Leakage current	Small	→	Large
Radiation interference with the Outside world	Small	→	Large

The factory setting of carrier frequency is different for different power drives. Although the user can modify it as needed, it shall be noted that: if the carrier frequency is set higher than the factory value, it will lead to an increase in the temperature rise of the heat sink of the drive, and at this time, the user needs to derate the use of the drive, or else the drive will be in danger of overheating alarm.

P0-16	Carrier Frequency Adjustment with Temperature	Factory value	1
	Setting range	0: No; 1: Yes	

Carrier Frequency Adjustment with Temperature means that when the drive detects a higher temperature of its own heat sink, it automatically reduces the carrier frequency in order to reduce the temperature rise of the drive. When the heat sink temperature is lower, the carrier frequency gradually returns to the set value. This function reduces the chance of the drive overheating alarm.

P0-17	Acceleration time 1	Factory value	Determination of model
	Setting range	0.00s~650.00s (P0-19=2) 0.0s~6500 .0s (P0-19=1) 0s~65000s (P0-19=0)	
P0-18	Deceleration time 1	Factory value	Determination of model
	Setting range	0.00s~650.00s (P0-19=2) 0.0s~6500 .0s (P0-19=1) 0s~65000s (P0-19=0)	

Acceleration time refers to the time it takes for the drive to accelerate from zero frequency to the acceleration/deceleration reference frequency (determined by P0-25), see t1 in the figure below. Deceleration time refers to the time required for the drive to decelerate from the acceleration/deceleration reference frequency (determined by P0-25) to zero frequency, see t2 in the figure below.

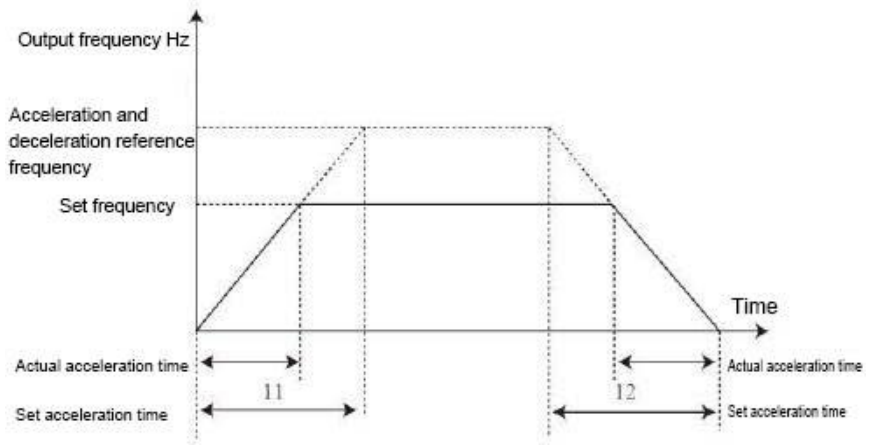

Acceleration and deceleration time diagram

Provides 4 groups of acceleration and deceleration time, the user can use the DI digital input terminal switching selection, four groups of acceleration and deceleration time by the following functions code setting:

Group I: P0-17, P0-18;

Group II: P8-03, P8-04;

Group III: P8-05, P8-06;

Group IV: P8-07, P8-08;

P0-19	Acceleration and deceleration time units	Factory value	1
	0	1 sec.	
	1	0.1 seconds	
	2	0.01 seconds	

Three acceleration and deceleration time units of 1 second, 0.1 second and 0.01 second are available to meet the needs of various sites.

Note: When this function parameter is modified, the number of decimal places displayed in the 4 groups of acceleration and deceleration times will change, and the corresponding acceleration and deceleration times will also change. It shall pay special attention during the application process.

P0-21	Auxiliary frequency source bias frequency during superposition	Factory value	1
	Setting range	0 .00Hz ~ Maximum Frequency P0- 10	

This function code is only valid when the frequency source is selected as the main auxiliary operation.

When the frequency source is the main auxiliary operation, P0-21 is used as the bias frequency and superimposed with the main auxiliary operation result as the final frequency setting value, so that the frequency setting can be more flexible.

P0-22	Frequency command resolution		Factory value	2
	Setting range	2	0.01Hz	

This parameter is used to determine the resolution of all frequency-dependent function codes.

P0-23	Digital set frequency shutdown memory selection		Factory value	1
	Setting range	0	Lost in memory	
		1	Memorization	

This function is valid only when the frequency source is set digitally.

"No Memory" means that after the drive stops, the digital set frequency value is restored to the value of P0-08 (Preset Frequency), and the frequency correction made by ▲, ▼ keys of the keypad or UP, DOWN of the terminal is cleared to zero.

"Memory" means that after the drive stops, the digital setting frequency is retained as the setting frequency at the time of the last stop, and the frequency correction carried out by ▲, ▼ keys of the keyboard or UP, DOWN terminals remains effective.

P0-24	Motor parameter set selection		Factory value	0
	Setting range	0	Motor parameter group 1	
		1	Motor parameter group 2	

Support the application of the drive to drag two motors at different times, two motors can be set separately motor nameplate parameters, independent parameter tuning, select different control modes, independent settings and operating performance-related parameters.

Motor parameter group 1 corresponds to function parameter group P1 and P2, motor parameter group 2 corresponds to function parameter group H2 User can select current motor parameter group by P0-24 function code, or switch motor parameter by digital input terminal DI. When the function code selection contradicts the terminal selection, the terminal selection shall prevail.

P0-25	Acceleration and deceleration time reference frequency		Factory value	0
	Setting range	0	Maximum frequency (P0-10)	
		1	Setting frequency	
		2	100Hz	

Acceleration and deceleration time refers to the acceleration and deceleration time from zero frequency to the frequency set by P0-25, and is shown in the figure below. When P0-25 is selected as 1, the acceleration/deceleration time is related to the set frequency. If the set frequency is changed frequently, the acceleration degree of the motor will be changed, so it is necessary to pay attention to it when applying.

P0-26	Run-time frequency command UP/DOWN reference		Factory value	0
	Setting range	0	Operating frequency	
		1	Setting frequency	

This parameter is valid only when the frequency source is set digitally.

It is used to determine which way to correct the set frequency when the ▲, ▼ keys of the keypad or terminal UP/DOWN action is used, i.e., whether the target frequency is increased or decreased on the basis of the operating frequency, or increased or decreased on the basis of the set frequency.

The difference between the two settings is evident when the drive is in the process of acceleration and deceleration, i.e. if the drive is running at a frequency different from that set for the

The different choices of this parameter vary greatly when the frequency is different

P0-27	Command Source Bundle Frequency		Factory value	000
	Setting range	Ones place	Operating panel Command Binding Frequency Source Selection	
		0	Unbound	
		1	Digitally set frequency source	
		2	AI1	
		3	AI2	
		4	AI3	
		5	PULSE Pulse setting (DI5)	
		6	Multi-segment command (computing)	
		7	Simple PLC	
		8	PID	
		9	Communication protocol	
		Tens place	Terminal Command Bound Frequency Source Selection (0~9, same bit)	
		Hundreds place	Communication Command Binding Frequency Source Selection (0~9, same bit)	

Define the bundle combination between the three operation command channels and the nine frequency given channels to facilitate synchronous switching. The meanings of the above frequency given channels are the same as the main frequency source X selection P0-03, please refer to P0-03 function code description. Different run command channels can be bundled with the same frequency given channels.

When the command source has a bundled frequency source, the frequency source set by P0-03~P0-07 will no longer function during the period that this command source is valid.

P0-28	Serial communication protocol selection		Factory value	0
	Setting range	0	MODBUS protocol	
		1	1: Profibus-DP, CANopen, Profinet, EtherCAT protocols	

Group P1 First motor parameters

P1-00	Motor type selection		Factory value	0
	Setting range	0	Ordinary asynchronous motor	
		1	Variable frequency asynchronous motors	
		2	Permanent magnet synchronous motor	
P1-01	Rating		Factory value	Determination of model
	Setting range		0.1kW~1000.0kW	
P1-02	Rated voltage		Factory value	Determination of model
	Setting range		1V~2000V	
P1-03	Rated current		Factory value	Determination of model
	Setting range		0.01A~655.35A (drive power <= 55kW) 0.1A~6553.5A (drive power > 55kW)	
P1-04	Rated frequency		Factory value	Determination of model
	Setting range		0.01Hz~Maximum Frequency	
P1-05	Rated speed		Factory value	Determination of model
	Setting range		1rpm~65535rpm	

The above function codes are motor nameplate parameters. Whether V/F control or vector control is used, it is necessary to accurately set the relevant parameters according to the motor nameplate.

Motor parameter tuning is required to obtain better V/F vector control performance, and the accuracy of the mediation results is closely related to the correct setting of the motor nameplate parameters.

P1-06	Asynchronous motor stator resistance	Factory value	Determination of model
	Setting range	0.001Ω~65.535Ω (drive power ≤ 55kW) 0.0001Ω~6.5535Ω (Drive power > 55kW)	
P1-07	Asynchronous motor rotor resistance	Factory value	Determination of model
	Setting range	0.001Ω~65.535Ω (drive power ≤ 55kW) 0.0001Ω~6.5535Ω (Drive power > 55kW)	
P1-08	Leakage reactance of asynchronous motors	Factory value	Determination of model
	Setting range	0.01mH~655.35mH (Drive power ≤ 55kW) 0.001mH~65.535mH (Drive power > 55kW)	

P1-09	Asynchronous motor mutual inductive resistance	Factory value	Determination of model
	Setting range	0.1mH~6553.5mH (Drive power ≤ 55kW) 0.01mH~655.35mH (Drive power > 55kW)	
P1-10	Asynchronous motor no-load current	Factory value	Determination of model
	Setting range	0.01A~F1-03 (Drive power ≤ 55kW) 0.1A~F1-03 (Drive power > 55kW)	

P1- 06~P1-10 are the parameters of the asynchronous motor, which are not on the nameplate of the motor and need to be obtained by auto-tuning of the driver. Among them, "Static tuning of asynchronous motor" can only get P1- 06~P1-08 three parameters, while "Complete tuning of asynchronous motor" can get all five parameters here, but also can get the encoder phase sequence, current loop PI parameters and so on.

When changing the rated motor power (P1-01) or rated motor voltage (P1-02), the drive will automatically modify the values of the P1-06~P1-10 parameters, restoring these five parameters to the commonly used standard Y series motor parameters.

P1-16	Synchronous motor stator resistance	Factory value	Determination of model
	Setting range	0.001Ω~65.535Ω (drive power ≤ 55kW) 0.0001Ω~6.5535Ω (Drive power > 55kW)	
P1-17	Synchronous motor D-axis inductance	Factory value	Determination of model
	Setting range	0.001Ω~65.535Ω (drive power ≤ 55kW) 0.0001Ω~6.5535Ω (Drive power > 55kW)	
P1-18	Synchronous motor Q-axis inductance	Factory value	Determination of model
	Setting range	0.01mH~655.35mH (Drive power ≤ 55kW) 0.001mH~65.535mH (Drive power > 55kW)	
P1-20	Synchronous motor reverse electromotive force	Factory value	Determination of model
	Setting range	0.1mH~6553.5mH (Drive power ≤ 55kW) 0.01mH~655.35mH (Drive power > 55kW)	
P1-22	Synchronous motor no-load current	Factory value	5%
	Setting range	0.01A~F1-03 (Drive power ≤ 55 kW) 0.1A~F1-03 (Drive power > 55kW)	

P1-16~P1-22 are the parameters of the synchronous motor, which are not on the nameplate of the motor and need to be obtained through the automatic tuning of the driver. Among them, "Synchronous Motor Dynamic Tuning" can not only get the four parameters of P1-16~P1-20, but also get the encoder phase sequence, current loop PI parameters and so on.

If it is not possible to tune the asynchronous motor on site, you can enter the corresponding function code above according to the parameters provided by the motor manufacturer.

P1-27	Number of encoder lines	Factory value	1024
	Setting range	1~65535	

Set the number of pulses per revolution for the ABZ or UVW incremental encoder. In the vector control mode with speed sensor, the number of encoder pulses must be set correctly, otherwise the motor will not run properly.

P1-28	Encoder Type		Factory value	0
	Setting range	0	ABZ Incremental Encoders	
		1	UVW Incremental Encoders	
		2	Rotary Transformer	
		3	Sine-cosine encoders	
		4	Wire saving method UVW encoder	

Support a variety of encoder types, different encoders need to be equipped with different PG cards, please use the correct purchase of PG cards. Among them, synchronous motors can choose any one of these five types of encoders, while asynchronous motors generally only use ABZ incremental encoder and rotary transformer After installing the PG card, please set P1-28 correctly according to the actual situation, otherwise the drive may not operate normally.

P1-30	ABZ Incremental Encoder AB Phase Sequence		Factory value	0
	Setting range	1	Forward	
		2	Opposite direction	

This function code is only valid for the ABZ incremental encoder, i.e. only when P1-28 = 0. It is used to set the phase sequence of the AB signal of the ABZ incremental encoder. This function code is valid for both asynchronous and synchronous motors, so that the AB phase sequence of the ABZ encoder can be obtained when the asynchronous motor is fully tuned or the synchronous motor is tuned with no load.

P1-31	Encoder mounting angle	Factory value	1024
	Setting range	0.0°~359.9°	

This parameter is only valid for synchronous motor control, for encoder type ABZ incremental encoder, UVW incremental encoder, rotary transformer, wire-saving UVW encoder, but not for sine-cosine encoder.

This parameter can be obtained when the synchronous motor is tuned with no load and tuned with load, which is very importantly, synchronous motors must be tuned for normal operation after initial installation.

P1-32	UVW Encoder UVW Phase Sequence		Factory value	0
	Setting range	0	Forward	
		1	Opposite direction	
P1-33	UVW Encoder Bias		Factory value	0.0°
	Setting range		0.0°~359.9°	

These two parameters are only valid for synchronous motors with UVW encoders.

These two parameters in the synchronous motor no-load tuning, with load tuning can be obtained, these two parameters are very important to the operation of the synchronous motor, so the synchronous motor initial installation must be tuned before normal operation.

P1-34	Rotary Transformer Pole Pairs	Factory value	1
	Setting range	1~6553.5	

The resolver is pole-to-pair and the pole-to-pair parameter must be set correctly when using this type of encoder.

P1-36	Speed Feedback PG Break Detection Time	Factory value	0.0s
	Setting range	0.0s: No action 0.1s~10.0s	

Used to set the detection time for encoder break faults, when set to 0.0s, the drive does not detect encoder break faults.

The drive alarms ERR20 when the drive detects a disconnect fault that lasts longer than the time set in P1-36.

P1-37	Tuning Options		Factory value	0
	Setting range	0	No operation	
		1	Static tuning of asynchronous motors	
		2	Complete tuning of asynchronous motors	
		3	Static integrity parameter identification	
		11	Synchronous motor stationary tuning	
		12	Dynamic tuning of synchronous motors	

0: No operation, i.e. tuning is disabled.

1: Asynchronous motor static tuning is applicable to the asynchronous motor and load are not easy to disconnect, and can not carry out complete tuning occasions. Before asynchronous motor static tuning, the motor type and motor nameplate parameters P1- 00~P1-05 must be set correctly. For asynchronous motor static tuning, the driver can obtain three parameters P1-06~P1-08.

ACTION DESCRIPTION: Set this function code to 1 , then press RUN and the drive will be stationary tuned.

2: Complete tuning of asynchronous motors

In order to ensure the dynamic control performance of the drive, please select the complete

tuning, at this time the motor must be disconnected from the load to keep the motor in no-load state. During the complete tuning process, the drive first carries out stationary tuning, and then accelerates to 80% of the rated frequency of the motor according to the acceleration time P0-17, and after holding it for a period of time, decelerates and stops according to the deceleration time P0-18, and ends the tuning.

Before carrying out complete tuning of asynchronous motors, in addition to the need to set the motor type and motor nameplate parameters P1-00 to P1-05, it is also necessary to correctly set the encoder type and the number of encoder pulses P1-27 and P1-28.

The asynchronous motor is fully tuned, and the drive can obtain the five motor parameters P1-06~P1- 10, as well as the AB phase sequence of the encoder P1-30, and the vector control current loop PI parameters P2-13~P2-16.

ACTION DESCRIPTION: Set this function code to 2 , then press RUN and the drive will be fully tuned.

3: Static complete parameter identification

For complete self-learning of motor parameters when the motor is stationary state without an encoder (at this time, the motor may still have slight vibration, please pay attention to safety).

Before performing asynchronous motor stationary complete tuning, the motor type and motor nameplate parameters P1-00~P1-05 must be set correctly. For asynchronous motor stationary complete tuning, the drive can obtain five parameters P1-06~P1-10.

During the no-load tuning process, the drive first completes the with-load tuning, then accelerates to the rated frequency of P0-08 motor according to the acceleration time P0-17, and keeps it for a certain period of time, then decelerates and stops according to the deceleration time P0-18 and ends the tuning.

11: Synchronous motor static self-learning

Before carrying out the static tuning of synchronous motor, the motor type and motor nameplate parameters P1-00~P1-05 must be set correctly, and the synchronous motor static tuning, the driver can get P1-16~P1-18 three parameters.

ACTION DESCRIPTION: Set this function code to 11, then press RUN and the drive will be statically tuned.

12: Synchronous motor no-load dynamic self-learning Before carrying out the synchronous motor no-load dynamic tuning, make sure that there is no load on the motor shaft, you must correctly set the motor type and motor nameplate parameters P1-00~P1-05 , synchronous motor no-load dynamic tuning, the drive can get P1-16~P1-18, P1-20 four parameters.

ACTION DESCRIPTION: Set this function code to 12, then press RUN and the drive will be dynamically tuned.

Note: Tuning can only be performed in the keypad operation mode; motor tuning cannot be performed in the terminal operation and communication operation modes.

Group P2 Vector control parameters

The P2 group function code is valid only for vector control, not for V/F control.

P2-00	Velocity loop proportional gain 1	Factory value	30 (synchronous motors: 20)
	Setting range	1~100	
P2-01	Velocity loop integration time 1	Factory value	0.50s
	Setting range	0.01s~10.00s	
P2-02	Switching frequency 1	Factory value	5.00Hz
	Setting range	0.00~P2-05	
P2-03	Velocity loop proportional gain 2	Factory value	20 (synchronous motors: 10)
	Setting range	0~100	
P2-04	Velocity loop integration time 2	Factory value	1.00s
	Setting range	0.01s~10.00s	
P2-05	Switching frequency 2	Factory value	10.00Hz
	Setting range	P2-02~Maximum Output Frequency	

When the drive is running at different frequencies, different speed loop PI parameters can be selected. When the operating frequency is less than the switching frequency 1 (P2-02), the speed loop PI parameters are P2-00 and P2-01, and when the operating frequency is greater than the switching frequency 2, the speed loop PI parameters are P2-03 and P3-04, and the speed loop PI parameters between the switching frequency 1 and the switching frequency 2 are the linear switching of the two sets of PI parameters, as shown in the figure below:

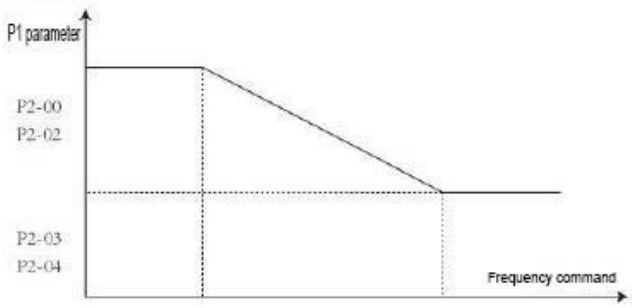

Schematic diagram of PI parameters

By setting the proportionality coefficient and integration time of the speed regulator, the dynamic response characteristics of the speed of the vector control can be adjusted. Increasing the proportional gain and decreasing the integration time can speed up the dynamic response of the speed loop. However, too large a proportional gain or too small an integration time may cause the system to oscillate. The recommended adjustment method is:

If the factory parameters can not meet the requirements, the factory value of the parameters based on fine-tuning, first increase the proportional gain, to ensure that the system does not oscillate; and then reduce the integration time, so that the system has a faster response characteristics, overshooting and smaller.

Note: If the PI parameters are not set properly, it may result in excessive speed overshoot. Or even generate overvoltage fault when overshooting back down

P2-06	Vector Control Differential Gain	Factory value	100%
	Setting range	50%~200%	

For vector control without speed sensor, this parameter is used to adjust the accuracy of the motor's speed stabilization: when the motor speed is low with a load, this parameter is increased, and vice versa.

For vector control with speed sensor, this parameter adjusts the amount of output current of the drive for the same load.

P2-07	Velocity loop filter time constant	Factory value	0.050s
	Setting range	0.000s~0.100s	

Under the vector control mode, the output of the speed loop regulator is the torque current command, and this parameter is used to filter the torque command. This parameter generally does not need to be adjusted, and the filtering time can be increased appropriately when the speed fluctuates greatly; if the motor oscillates, the parameter shall be reduced appropriately.

The speed loop filtering time constant is small, and the drive output torque may fluctuate widely, but the speed response is fast.

P2-09	Selection of electric torque upper limit command in speed control mode	Factory value	0
	Setting range	0: Parameter P2-10 Setting 1: AI1 2: AI2 3: AI3 4: Pulse (DI5) 5: Communication given 6: MIN (AI1, AI2) 7: MAX (AI1, AI2) The full scale range of options 1-7 corresponds to P2-10.	
P2-10	Digital setting of upper limit of electric torque in speed control mode	Factory value	150.0%
	Setting range	0.0 per cent ~ 200.0 per cent	

P2-10 is used to set the upper limit of electric torque of the inverter. It is electric when the actual rotation direction of the motor is the same as the torque direction, and vice versa for braking.

Where different setting values are required for the electric torque and braking torque, they can be set separately with P2-11 and P2-12.

For example, cam load occasions, due to the existence of electric and braking state of the cycle change, this time by reducing the upper limit of the braking torque P2-12 can effectively reduce the inverter bus voltage rise without affecting the normal operation of the driven load.

P2-11	Selection of upper limit command for generating torque in speed control mode	Factory value	0
	Setting range	0: Parameter P2-12 setting 1: AI1 2: AI2 3: AI3	

		4: Pulse (DI5) 5: Communication given 6: MIN (AI1, AI2) 7: MAX (AI1, AI2) The full scale range of options 1-7 corresponds to P2-12.	
P2-12	Digital setting of upper limit of generating torque in speed control mode	Factory value	150.0%
	Setting range	0.0 per cent ~ 200.0 per cent	

P2-12 is used to set the upper limit of generating torque of the inverter. When the actual rotation direction of the motor is the same as the direction of the torque it is electric, and vice versa it is braking.

Where different setting values are required for the electric torque and braking torque, they can be set separately with P2-11 and P2-12.

For example, cam load occasions, due to the existence of electric and braking state of the cycle change, this time by reducing the upper limit of the braking torque P2-12 can effectively reduce the inverter bus voltage rise without affecting the normal operation of the driven load.

P2-13	Excitation regulation proportional gain	Factory value	2000
	Setting range	0~60000	
P2-14	Excitation Regulation Integral Gain	Factory value	1300
	Setting range	0~60000	
P2-15	Torque adjustment proportional gain	Factory value	2000
	Setting range	0~60000	
P2-16	Integral gain for torque regulation	Factory value	1300
	Setting range	0~60000	

Vector control current loop PI regulation parameters, which are automatically obtained after complete motor tuning and generally do not need to be modified. The integral regulator of the current loop, instead of using the integral time as the measure, sets the integral gain directly. Setting the current loop PI gain too large may cause the whole control loop to oscillate, so when the current oscillates or the torque fluctuates greatly, you can manually reduce the PI proportional gain or integral gain here.

P2-17	Speed Ring Points Properties	Factory value	0
	Setting range	0: Invalid 1: Effective	

0: Integral effect during acceleration and deceleration, fast response in fast acceleration, but may bring speed overshooting.

1: Integral separation during acceleration and deceleration, rapid acceleration occasions can effectively reduce the speed overshoot, but the response speed will be slower

P2-18	Synchronous motor weak magnetic mode	Factory value	1
	Setting range	0: Weak magnetic frequency adjustment;	

		1: Automatic adjustment; 2: Feedforward and automatic adjustment	
P2-19	Synchronous motor weak magnetic coefficient	Factory value	5
	Setting range	1~50	
P2-23	Synchronous motor output voltage saturation margins	Factory value	5%
	Setting range	1%~50%	

This parameter sets the weak magnetic mode of the synchronous motor, and different weak magnetic modes can be selected according to the working conditions.

P2-18=0 No weak magnetism

Synchronous motor does not carry out weak magnetic control, at this time the maximum motor speed can be reached and the inverter bus voltage, the advantage is that there is no weak magnetic current, the output current is smaller, the disadvantage is that the operating frequency can not reach the set frequency, if the customer wants to achieve a higher speed need to open the weak magnetic function.

P2-18=1 Automatic adjustment mode

This type of weak magnetism is simple and reliable, the higher the speed after entering the weak magnetism zone, the higher the weak magnetism current, and the higher the weak magnetism coefficient of the synchronous motor, P2-19, can be appropriately increased for occasions where fast weak magnetism is required, but P2-19 is too large to cause instability of the current.

P2-18=2 integrated mode of calculation + automatic adjustment

The combined method of calculation + automatic adjustment has a faster adjustment of the weak magnetic current, and it can be set to this mode where automatic adjustment cannot meet the demand, but this mode depends on the motor parameter values.

P2-20	Over-modulation voltage factor	Factory value	105%
	Setting range	100%~110%	

The maximum output voltage coefficient indicates the maximum output voltage enhancement ability of the inverter, increasing P2-20 can improve the maximum load carrying capacity of the weak magnetic area of the motor, but the motor current ripple increases, which will aggravate the motor heat; on the contrary, the maximum load carrying capacity of the weak magnetic area of the motor will be decreased, but the motor current ripple decreases, which will alleviate the heat generated by the motor. Generally there is no need to adjust.

P2-21	Constant power area torque coefficient	Factory value	100%
	Setting range	50%~200%	

This parameter is effective only when the motor is running above the rated frequency. When the motor needs to be accelerated sharply to 2 times the rated frequency of the motor and the actual acceleration time is long, reduce P2-21 appropriately; when the motor is loaded at 2 times the rated frequency and the speed drop is large, increase P2-21 appropriately, and generally there is no need to change.

P2-22	Generation power limit enable	Factory value	0
	Setting range	0~1	

When P2-22 is set to 1, the upper limit of the generating torque P2-12 and the upper limit of the generating torque source P2-11 take effect. By default, there is no distinction between the generating torque and the electric torque, and the upper limit is P2-10. After entering the weak magnetism, if you want to have a higher output voltage and thus reduce the weak magnetism current, you can appropriately reduce the saturation margin of the output voltage of the synchronous motor P2-23, but if P2-23 is too small, it will make the output voltage saturate easier, thus affecting the control performance. However, if P2-23 is too small, the output voltage will saturate more easily, thus affecting the control performance.

P2-24	Initial position detection current	Factory value	10%~180%
	Setting range	80 per cent	
P2-25	Whether the initial position is detected	Factory value	1
	Setting range	0: No detection 1: Every run detection 2: Power-on first run test 3: Detection of angle reversal per run	

Initial position angle detection is generally used for synchronous motor SVC, the advantage is that there is no reversal during startup, the disadvantage is that there is a certain noise during startup, for the occasion that reversal is not allowed during startup and the rotor position of the motor will change after stopping, P2-25 must be set to 1, and in other cases, it can be set to 0, or 2 or 3.

FVC is only detected in the case of ABZ encoder and the first time it is powered on, it is recommended not to modify it, otherwise there may be a risk of flying. The current value of the detection can be set via P2-24, the lower the current the lower the sound will be emitted during the detection, however, too small a current may result in inaccurate detection of the position, it is recommended to leave it unchanged in the FVC mode.

P2-26	Velocity Ring Mode Selection	Factory value	0
	Setting range	0~1	

Synchronous motor control parameters Two speed loop modes can be selected, 0: normal speed control, 1: enhanced speed loop control

P2-27	Synchronous motor convex rate adjustment gain	Factory value	100
	Setting range	50~500	
P2-28	Maximum torque to current ratio control enable	Factory value	0
	Setting range	0: not enabled 1: Enabling	

This function code is only effective when the motor is a convex permanent magnet synchronous motor, the so-called convex permanent magnet synchronous motor is generally an inserted permanent magnet synchronous motor (IPMSM), the judgement is based on P1-18/P1-17>1.5, after confirming that it is a convex motor, set P2-28 to 1, and the output current will be smaller under the same load, if the output current does not decrease or even increase under the same load after setting P2-28 to 1, you can adjust P2-27 until the output current is the minimum. If after setting P2-28 to 1, the output current under the same load does not decrease or even increase, you can adjust P2-27 until the output current is minimum.

P2-30	Current loop KP during tuning	Factory value	6
	Setting range	0~100	
P2-31	Current loop KI during tuning	Factory value	6
	Setting range	0~100	

Synchronous motor control parameters, this set of function codes is only used during parameter tuning.

In no-load tuning (P1-37=12), if the motor appears to oscillate or diverge during the tuning process, you can appropriately reduce or increase the reorganization function code (generally reduced) until the tuning is normal; in loaded tuning (P1-37=11) generally do not need to be modified.

P2-32	Z signal correction enable	Factory value	1
	Setting range	0~1	

Synchronous motor control parameter, this function code is only meaningful when the encoder is incremental encoder, the Z signal correction is enabled by default, which can eliminate the accumulated position deviation, if there are some occasions where the interference to the Z signal of the encoder is relatively big, it will cause the flying car or affect the output of the motor, and in serious cases, it may even report the error of the encoder, at this time, it can be canceled by setting the P2-32 to 0 to cancel the correction of the Z signal.

P2-33	Synchronous motor SVC speed filter level	Factory value	100
	Setting range	10~1000	

When the synchronous motor is in SVC mode, if the speed fluctuates greatly or the current fluctuates greatly, the speed filter coefficient can be increased appropriately to make the estimated speed smoother.

P2-34	Synchronous motor SVC speed estimation proportional gain	Factory value	40
	Setting range	5~200	
P2-35	Synchronous motor SVC Speed Estimation Integral Gain	Factory value	30
	Setting range	5~200	

When the synchronous motor is in SVC mode, these two parameters are integral parameters of speed estimation ratio, which generally do not need to be modified.

P2-36	synchronous motor SVC initial excitation current limit	Factory value	30
	Setting range	0~150	

Synchronous motor control parameters, in order to better control effect at low speed will increase a certain excitation current, through the P2-36 can control the size of the excitation current, the default is 30% of the motor rated current, set to 0 that is, do not increase the excitation current, the operating frequency reaches the rated frequency of more than 20%, the excitation current cancellation.

P2-37	Minimum carrier frequency for synchronous motor SVC	Factory value	1.5
	Setting range	0.8~100.0	

Synchronous motor control parameters, in order to better low-speed load capacity SVC in low-speed operation will reduce the load frequency, with the increase of the set frequency will eventually reach the set load frequency P0-15, P2-37 is the beginning of the lowest load frequency, low load frequency noise is relatively large, such as the noise requirements can be set to P2-37 and P0-15 consistent.

P2-43	Zero servo enable	Factory value	0
	Setting range	0~1	
P2-44	Switching frequency	Factory value	0.30
	Setting range	0.00~655.35	
P2-45	Zero servo speed loop proportional gain	Factory value	10
	Setting range	1~100	
P2-46	Zero servo speed loop integration time	Factory value	0.5
	Setting range	0.01~10.00	

This group of parameters is synchronous motor control parameters, used to set the zero servo function, in the need to maintain the position, and requires a strong rigidity of the zero servo occasions, you can set P2-43 to 1 to open, the default is 0 does not open, in the opening of the first will be set to 1 P2-26, that is, the use of zero servo with the speed of the speed ring, P2-44 is the frequency of the switching, P2-45 and P2-46 is the proportion of the speed ring with zero servo. P2-44 is the switching frequency, P2-45 and P2-46 are the proportional gain and integration time of the speed loop when zero servo is used.

P2-47	Stopping the machine, prohibits reversal	Factory value	0
	Setting range	0~1	
P2-48	Stopping Angle	Factory value	0.8
	Setting range	0.0~10.0	

Synchronous motor control parameter, in deceleration stop or deceleration from a certain operating frequency to 0Hz may occur motor reversal, if you want to avoid the occurrence of reversal can be set P2-47 to 1 to open the anti-reversal function. P2-48 can be set according to the drastic degree of reversal, the default value is 0.8 degrees, if the reversal still occurs under the default condition, you can increase the value of P2-48 appropriately until no reversal occurs, it is recommended that you do not need to turn on this function if the reversal requirement is not very demanding.

P2-49	On-line tuning enable	Factory value	0
	Setting range	0: Close 1: Tuning before powering up for the first run 2: Pre-run tuning	

In synchronous motor SVC control, if P2-49 is set to 1, parameter tuning will be performed automatically during the first run on power-up, and a separate tuning step is not required, if P2-49 is set to 2, parameter tuning will be performed automatically before each run, and a separate parameter tuning session is also not required, and if P2-49 is set to 0, this function is turned off and a separate tuning step is required.

P2-50	On-line counter electromotive force recognition	Factory value	0
	Setting range	0:Close 1:Open	

Synchronous motor SVC mode P2-50 set to 1 can be online reverse potential recognition, through the function code U0-74 to display the online recognition of the value of the reverse potential, if the value is too low, the motor may have demagnetisation phenomenon, set to 0 to disable this function

Group P3 V/F control parameters

This group of function codes is valid only for V/F control, not for vector control.

V/F control is suitable for general-purpose loads such as fans and pumps, or for applications where one drive is used with multiple motors, or where there is a large difference between drive power and motor power.

P3-00	V/F curve setting		Factory value	0
	Setting range	0	Straight line V/F	
		1	Multipoint V/F	
		2	Square V/F	
		3	1.2 times V/F	
		4	1.4 times V/F	
		6	1.6 times V/F	
		8	1.8 times V/F	
		9	Reservation	
		10	V/F Full separation mode	
		11	V/F semi-split mode	

0: Linear V/F. Suitable for normal constant torque loads.

1: Multi-point V/F. It is suitable for special loads such as dehydrators and centrifuges. At this time, by setting parameters P3-03~P3-08, you can obtain any V/F relationship curve.

2: Square V/F. Suitable for centrifugal loads such as fans and pumps.

3~8: V/F relationship curves between linear V/F and squared V/F.

10: Fully separated V/F mode. In this case, the driver's output frequency and output voltage are independent of each other, with the output frequency determined by the frequency source and the output voltage determined by the P3-13 (V/F split voltage source).

V/F fully separated mode, generally used in induction heating, inverter power supply, torque motor control and so on.

11: V/F semi-split mode.

V and F are proportional in this case, but the proportionality can be set by the voltage source P3-13 and the relationship between V and F is also relates to the rated voltage and rated frequency of the motor in group P1.

Assuming that the voltage source input is X (X is a value from 0 to 100%), the relationship between the driver output voltage V and frequency F is: V/F=2*X* (motor rated voltage) / (motor rated frequency)

P3-01	Torque Increase	Factory value	Determination of model
	Setting range	0.0%~30%	
P3-02	Torque boost cut-off frequency	Factory value	50.00Hz
	Setting range	0.00Hz~ Maximum Output Frequency	

In order to compensate for the low-frequency torque characteristics of V/F control, some boost compensation is made to the output voltage of the driver at low frequency. However, if the torque boost is set too large, the motor is easy to overheat and the driver is easy to overcurrent.

It is recommended to increase this parameter when the load is heavy and the motor starting torque is not sufficient. When the load is light, the torque boost can be reduced. When the torque boost is set to 0.0, the drive is auto torque boost, in which case the drive automatically calculates the required torque boost value according to the motor stator resistance and other parameters.

12: Torque boost cut-off frequency: below this frequency, the torque boost is effective, above this set frequency, the torque boost is ineffective, see the following figure for details.

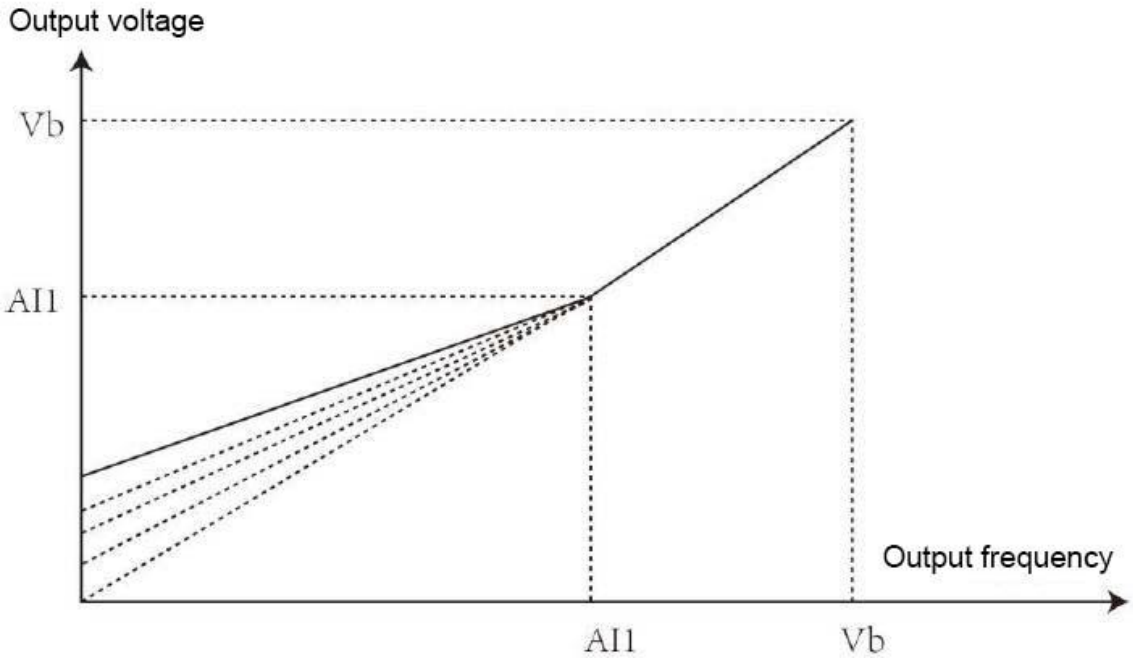

AI1: Manual torque boost voltage V b: Maximum output voltage

P1: Manual torque boost cut-off frequency P b: Rated operating frequency

Manual Torque Boost Schematic

P3-08	Setting range	P3-05~ Motor rated frequency (P1-04) Note: Motor 2 is rated at H2-04.	
	Multi-point V/F voltage points AI3	Factory value	0.0%
	Setting range	0.0%~100.0%	

P3-03~P3-08 Six parameters define the multi-segment V/F curve.

The curve of multi-point V/F shall be set according to the load characteristics of the motor, and it shall be noted that the relationship between the three voltage points and frequency points must satisfy: AI1 ＜ AI2 ＜ AI3, f1 ＜ f2 ＜ f3. The following diagram shows the setting of the multi-point V/F curve.

Setting the voltage too high at low frequencies may cause the motor to overheat or even burn out, and the drive may lose speed or overcurrent protection.

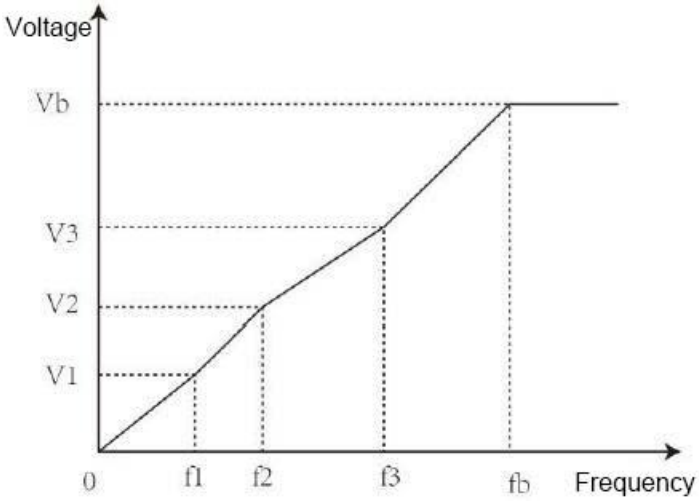

AI1 -AI3: Multi-speed V/F 1st - 3rd % of voltage

f1 - f3: Multi-band V/F Frequency Percentage of 1st - 3rd Band

Vb: Rated motor voltage fb: Rated motor operating frequency

Multi-point V/F Curve Setting Diagram

P3-09	V/F Differential Compensation Gain	Factory value	80.0 per cent
	Setting range	0%~200.0%	

This parameter is only valid for asynchronous motors.

The V/F rotational compensation can compensate for the motor speed deviation generated by the asynchronous motor when the load is increased, so that the motor speed can be basically kept stable when the load is changed.

The V/F differential compensation gain is set to 100.0%, which means that when the motor is loaded with the rated load, the compensated differential is the rated slip of the motor, and the rated differential of the motor is calculated by the driver through the P1 group of the rated frequency and rated speed of the motor itself.

When adjusting the V/F rotational compensation gain, it is generally based on the principle that the motor speed is basically the same as the target speed when the rated load is applied. When the motor speed is different from the target value, it is necessary to fine-tune this gain appropriately.

P3-10	V/F Overexcitation gain	Factory value	64
	Setting range	0~200	

For applications where the drive deceleration process is prone to overvoltage alarms, the overexcitation gain needs to be increased. However, too large an overexcitation gain can easily lead to an increase in output current, which needs to be weighed in the application.

It is recommended to set the overexcitation gain to 0 if the inertia is very small and no voltage rise occurs during motor deceleration; it is also recommended to set the overexcitation gain to 0 if there is a braking resistor.

P3-11	V/F Oscillation suppression gain	Factory value	Determination of model
	Setting range	0~100	

This gain is selected to be as small as possible under the premise of effectively suppressing oscillations, so as not to adversely affect V/F operation. When there is no oscillation in the motor, please select the gain as 0. Only when the motor is obviously oscillating, it is necessary to increase the gain appropriately, and the larger the gain, the more obvious the suppression of oscillation.

When using the oscillation suppression function, the motor rated current and no-load current parameters shall be accurate, otherwise the V/F oscillation suppression effect is not good.

P3-13	V/F separated voltage sources		Factory value	0
	Setting range	0	Digital Setting (P3- 14)	
		1	AI1	
		2	AI2	
		3	AI3	
		4	PULSE Pulse (DI5)	
		5	Multi-segment command (computing)	
		6	Simple PLC	
		7	PID	
		8	Communication protocol	
		100.0% Corresponds to rated motor voltage (P1-02, H2-02).		
P3-14	V/F Separate voltage digital setting		Factory value	0V
	Setting range		0V~ Motor Rated Voltage	

V/F separation is generally used in applications such as induction heating, inverter power supplies and torque motor control.

When V/F split control is selected, the output voltage can be set by function code P3-14, or from Analog, multi-segment command, PLC, PID or communication. When non-digital settings are used, 100% of each setting corresponds to the rated motor voltage, and when the percentage of Analog or other output settings is negative, the absolute value of the setting is the valid setting.

0: Digital setting (P3-14)

The voltage is set directly from P3-14.

1: AI1 2: AI2 3: AI3

The voltage is determined by the Analog input terminals.

4: PULSE pulse setting (DI5)

The voltage is given by terminal pulses.

Specifications of pulse feed signal: Voltage range 9V~30V, Frequency range 0kHz~100kHz.

5: Multi-segment instruction

When the voltage source is a multi-segment command, set the P4 group and PC group parameters to determine the correspondence between the given signal and the given voltage. The 100.0% given by the PC group parameter multi-segment instruction is the percentage of the rated voltage relative to the motor.

6: Simple PLC

When the voltage source is a simple PLC, you need to set the PC group parameters to determine the given output voltage.

7: PID

Generates output voltage according to PID closed loop. For details, see the introduction of PA group PID.

8: Communication given

The finger voltage is given by the host computer via communication.

V/F Separate Voltage Source Selection is used in a similar way to Frequency Source Selection, see P0-03 Main Frequency Source Selection for an introduction. The 100.0% of the corresponding setting for each type of selection refers to the rated motor voltage (taking the absolute value of the corresponding setting value).

P3-15	Voltage rise time for V/F separation	Factory value	0.0s
	Setting range	0.0s~1000.0s	
P3-16	Voltage deceleration time for V/F separation	Factory value	0.0s
	Setting range	0.0s~1000.0s	

The V/F separation rise time refers to the time it takes for the output voltage to change from 0V to the rated voltage of the motor, as shown below

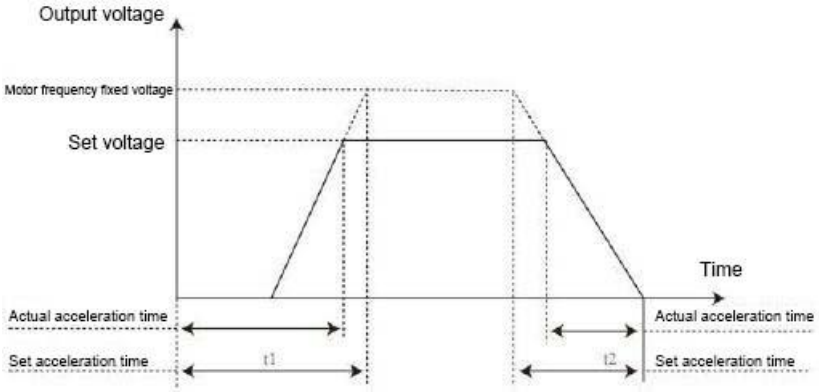

V/F Separation Diagram

P3-17	V/ F split stop mode	Factory value	0
	Setting range	0: Frequency/voltage independently reduced to 0 1: Voltage is reduced to 0 and then frequency is reduced.	

0: Frequency/voltage is reduced independently to the point where the V/F output voltage is reduced to 0V in accordance with the voltage drop time (P3-15), and the V/F output frequency is reduced to 0Hz in accordance with the deceleration time (P0-18) at the same time.

1: Frequency decreases after voltage decreases to zero.

The V/F separation output voltage first decreases to 0V by the voltage drop time (P3-15) and then the frequency decreases to 0Hz by the deceleration time (P0-18).

V/F When the differential compensation is effective, the appropriate differential compensation time constant can enhance the stability of the motor speed after the differential compensation.

P3-18	Divergence compensation time constant	Factory value	0.30s

	Setting range	0.02s~1.00s	
P3-19	Online torque compensation gain	Factory value	100%
	Setting range	80%~150%	

Effective when automatic torque boost is used for V/F control, it enhances the low-speed load carrying capability of V/F control and generally requires no modification.

P3-29	Auto frequency-up Enable	Factory value	0
	Setting range	0: Not enabled 1:Enable	
P3-30	Minimum electric torque current	Factory value	50
	Setting range	10~100	
P3-31	Maximum generating torque current	Factory value	20
	Setting range	10~100	
P3-32	Automatic frequency-up KP	Factory value	50
	Setting range	0~100	
P3-33	Auto Frequency-up KI	Factory value	50
	Setting range	0~100	

Automatic frequency up is mainly used in situations where the center of gravity of the load deviates from the physical center and causes overvoltage due to the increase in bus voltage caused by the energy feedback of the load itself during constant speed operation, such as when frequency converters are applied to stone saws.

Group P4 Input terminals

This series of drives are equipped with 5 multifunctional digital input terminals as standard (of which DI5 can be used as a high-speed pulse input terminal) and 2 Analog input terminals. If the system requires more inputs and outputs, the optional multi-function input/output expansion card is available. Multi-function input/output expansion card has 5 multi-function digital input terminals (DI6~DI10) and 1 Analog input terminal (AI3).

Function code	Name	Factory value	Note
P4-00	DI1 terminal function selection	1 (Positive operation)	Standard equipment
P4-01	DI2 terminal function selection	4 (Positive rotation nodding)	Standard equipment
P4-02	DI3 terminal function selection	9 (Fault reset)	Standard equipment
P4-03	DI4 terminal function selection	12 (Multi-speed 1)	Standard equipment
P4-04	DI5 terminal function selection	13 (Multi-speed 2)	Standard equipment
P4-05	DI6 terminal function selection	0	Extensions
P4-06	DI7 terminal function selection	0	Extensions
P4-07	DI8 terminal function selection	0	Extensions
P4-08	DI9 terminal function selection	0	Extensions
P4-09	DI1 0 terminal function selection	0	Extensions

These parameters are used to set the functions of the digital multi-function input terminals, and the functions that can be selected are shown in the table below:

Set value	Functionality	Instructions
0	Non-functional	The unused terminals can be set to "no function" to prevent malfunction.
1	FWD	Forward and reverse rotation of the drive is controlled via external terminals.
2	Reverse Run (REV)	
3	Three-wire operational control;	This terminal is used to determine that the drive operation is in 3-wire control mode. For details, refer to the description of function code P4-11 ("Terminal command mode").
4	Positive Rotation jog (FJOG)	FJOG is jog forward operation, RJOG is jog reverse operation. Refer to function codes P8-00, P8-01, P8-02 for frequency, acceleration and deceleration times.
5	Reverse Jogging (RJOG)	

6	Terminal UP	Frequency increment and decrement commands can be modified when the frequency is set from an external terminal. When the frequency source is set digitally, the set frequency can be adjusted up or down.
7	Terminal DOWN	
8	Free stop	The drive blocks the output, and the motor stopping process is not controlled by the drive at this time. This method has the same meaning as the free stop described in P6-10.
9	Fault Reset (RESET)	Function for fault reset using the terminals. Same function as the RESET key on the keypad. Use this The function enables remote fault reset.
10	Run pause (in computing)	The drive decelerates and stops, but all operating parameters are memorized. For example, PLC parameters, swing frequency parameters, PID parameters. After the signal disappears from this terminal, the drive returns to the operation state before stopping.
11	External fault normally open input	When this signal is sent to the drive, the drive reports the fault ERR15 and carries out fault processing according to the fault protection action mode (for details, attend function code P9-47).
12	Multi-speed terminal 1	The 16 states of these four terminals can be used to set 16 speeds or 16 other commands. For details, see Exhibit 1.
13	Multi-Speed Terminal 2	
14	Multi-Speed Terminal 3	
15	Multi-Speed Terminal 4	
16	Select terminal 1 for acceleration and deceleration	Four acceleration and deceleration time selections are achieved by the four states of these two terminals, as detailed in Exhibit 2.
17	Acceleration and deceleration time selection terminal 2	
18	Frequency source switching	Used to switch to select different frequency sources. This terminal is used to switch between two frequency sources when switching between them is set as the frequency source according to the setting of the frequency source selection function code (P0-07).
19	UP/DOWN Setting clear (terminal, keypad)	When the frequency is given as a digital frequency feeder, this terminal clears the frequency value changed by terminal UP/DOWN or keypad UP/DOWN, restoring the given frequency to the value set by P0-08.
20	Run command switching terminal	When the command source is set to terminal control (P0-02=1), this terminal allows switching between

		terminal control and keypad control. When the command source is set to communication control (P0-02=2), this terminal can switch between communication control and keypad control.
21	Acceleration and deceleration prohibited	Ensures that the drive is not affected by external signals (except for the stop command) and maintains the current output frequency.
22	PID pause	The PID is temporarily disabled and the drive maintains the current output frequency and no longer performs PID regulation of the frequency source.
23	PLC status reset	The PLC is paused during execution, and when it is run again, the drive can be restored to the initial state of the simple PLC using this terminal.
24	Pause in oscillation frequency	The driver outputs at centre frequency. The swing frequency function is suspended.
25	Tally Input	Input terminal for tally pulse.
26	Counter Reset	Zeroing of the counter status.
27	Length Count Input	Input terminal for length counting.
28	Length reset	Length Zero
29	Torque control prohibited	The drive is prohibited from torque control, and the drive enters speed control mode.
30	PULSE frequency input (valid only for DI5)	DI5 Functions as a pulse input terminal.
31	Reservation	Reservation
32	Immediate DC braking	When this terminal is active, the drive switches directly to the DC braking state.
33	External Fault Normally Closed Input	When an external fault normally closed signal is fed to the drive, the drive reports fault ERR15 and stops.
34	Frequency Modify Enable	If this function is set to active, when there is a change in frequency, the driver does not respond to the change in frequency until this terminal state is invalid.
35	PID action direction reversed	When this terminal is active, the direction of PID action is opposite to the direction set by PA-03.
36	External stop terminal 1	For keypad control, this terminal can be used to stop the drive, equivalent to the function of the STOP key on the keypad.
37	Control command switching terminal 2	Used to switch between terminal control and communication control. If the command source is selected as terminal control, the system switches to communication control when the terminal is valid; vice

		versa.
38	PID integral pause	When this terminal is valid, the integral regulation function of PID is suspended, but the proportional and differential regulation functions of PID remain valid.
39	Switching between frequency source X and preset frequency	If this terminal is active, the frequency source X is replaced by the preset frequency (P0-08).
40	Frequency source Y and preset frequency switching	If this terminal is active, the frequency source Y is replaced by the preset frequency (P0-08).
41	Motor selection terminal 1	The four states of the two terminals enable the switching of four sets of motor parameters, as detailed in Exhibit 3.
42	Motor selection terminal 2	
43	PID parameter switching	When the PID parameter switching condition is the DI terminal (PA-18=1), use PA-05 to PA-07 for PID parameters when this terminal is invalid, or use PA-15 to PA-17 when this terminal is valid;
44	User-defined fault 1	When user-defined faults 1 and 2 are valid, the drive alarms ERR27 and ERR28, respectively, and the drive will process them according to the action mode selected by fault protection action selection P9-49.
45	User-defined fault 2	
46	Speed control/torque control switching	Enables the drive to switch between torque control and speed control modes. When this terminal is invalid, the drive operates in the mode defined by H0-00 (speed/torque control mode), and when this terminal is valid, it switches to the other mode.
47	Emergency stop	When this terminal is active, the drive stops as quickly as possible, with the current at the set current limit during the stopping process. This function is used to fulfil the requirement that the drive shall be stopped as quickly as possible when the system is in an emergency situation.
48	External stop terminal 2	In any control mode (panel control, terminal control, communication control), the terminal can be used to decelerate the driver to stop, and the deceleration time is fixed as deceleration time 4.
49	Deceleration DC braking	When this terminal is active, the drive first decelerates to the stop DC braking start frequency and then switches to DC braking.
50	This run time is cleared to zero	When this terminal is valid, the drive's timing time for this run is cleared to zero. This function needs to be used in conjunction with Timed Run (P8-42) and Time Arrival for This Run (P8-53).

The 4 multi-segment command terminals can be combined into 16 states, and each of the 16 states corresponds to 16 command settings. The details are shown in the table below:

K4	K3	K2	K1	Instruction Setting	Corresponding parameter
OFF	OFF	OFF	OFF	Multi-segment instruction 0	PC-00
OFF	OFF	OFF	ON	Multi-segment instruction 1	PC-01
OFF	OFF	ON	OFF	Multi-segment instruction 2	PC-02
OFF	OFF	ON	ON	Multi-segment instruction 3	PC-03
OFF	ON	OFF	OFF	Multi-segment instruction 4	PC-04
OFF	ON	OFF	ON	Multi-segment instruction 5	PC-05
OFF	ON	ON	OFF	Multi-segment instruction 6	PC-06
OFF	ON	ON	ON	Multi-segment instruction 7	PC-07
ON	OFF	OFF	OFF	Multi-segment instruction 8	PC-08
ON	OFF	OFF	ON	Multi-segment instruction 9	PC-09
ON	OFF	ON	OFF	Multi-segment instruction 10	PC-10
ON	OFF	ON	ON	Multi-segment instruction 11	PC-11
ON	ON	OFF	OFF	Multi-segment instruction 12	PC-12
ON	ON	OFF	ON	Multi-segment instruction 13	PC-13
ON	ON	ON	OFF	Multi-segment instruction 14	PC-14
ON	ON	ON	ON	Multi-segment instruction 15	PC-15

When the frequency source is selected as multi-band speed, 100.0% of the function code PC-00~PC-15 , corresponds to the maximum frequency P0-10. In addition to being used as a multispeed function, the multi-segment command can also be used as a given source for PID, or as a voltage source for V/F separation control, etc., to meet the need to switch between different given values.

Acceleration and Deceleration Time Selection Terminal Function Description

Terminal 2	Terminal 1	Acceleration or deceleration time selection	Corresponding parameter
OFF	OFF	Acceleration time 1	P0-17, P0-18
OFF	ON	Acceleration time 2	P8-03, P8-04
ON	OFF	Acceleration time 3	P8-05, P8-06
ON	ON	Acceleration time 4	P8-07, P8-08

Motor Selection Terminal Function Description

Terminal 2	Terminal 1	Click to select	Corresponding parameter set
OFF	OFF	Motor 1	Groups P1, P2
OFF	ON	Motor 2	Group H2

P4-10	DI digital input terminal Filter time	Factory value	0.010s
	Setting range	0.000s~1.000s	

Set the software filtering time for the DI digital input terminal status. If the input terminal is susceptible to interference that may cause malfunction, this parameter can be increased to enhance the anti-interference capability. However, an increase in the filtering time will cause the response of the DI digital input terminal to slow down.

P4-11	Terminal command method		Factory value	0
	Setting range	0	Two-wire 1	
		1	Two-wire 2	
		2	Three-wire 1	
		3	Three-wire 2	

This parameter defines four different ways of controlling the operation of the drive via the external terminals.

Note: For the convenience of explanation, the following three terminals DI1, DI2 and DI3 among the multi-function input terminals DI1~DI10 are selected as external terminals. In other words, the function of DI1, DI2 and DI3 terminals can be selected by setting the value of P4-00~P4-02, see the setting range of P4-00~P4-09 for detailed function definition.

0: Two-wire mode 1: This is the most commonly used two-wire mode. The forward and reverse rotation of the motor is determined by terminals DI1 and DI2.

Run. The function codes are set as follows:

Function code	Name	Set value	Functional Description
P4-11	Terminal command method	0	Two-wire 1
P4-00	DI1 Terminal function selection	1	FWD
P4-01	DI2 terminal function selection	2	Reverse Run (REV)

K1	K2	Run command
1	0	Forward motion (mechanics)
0	1	Invert (upside-down, inside-out, back-to-front, white to black etc)
1	1	Cessation
0	0	Cessation

Two-wire schema 1

As shown in the figure above, in this control mode, K1 is closed and the drive runs in forward rotation, K2 is closed and reversed, K1 and K2 are closed or disconnected at the same time, and the drive stops running.1: Two-wire mode 2: When using this mode, the DI1 terminal functions as a run enable terminal, and the DI2 terminal functions to determine the direction of operation.

The function codes are set as follows:

Function code	Name	Set value	Functional Description
P4-11	Terminal command method	1	Two-wire 2
P4-00	DI1 Terminal function selection	1	Run enable (computing)
P4-01	DI2 terminal function selection	2	Forward and reverse running directions

K1	K2	Run command
1	0	Forward motion (mechanics)
1	1	Invert (upside-down, inside-out, back-to-front, white to black etc)
0	0	Cessation
0	1	Cessation

Two-wire schema 2

As shown in the figure above, this control mode in the K1 closed state, K2 disconnect drive forward, K2 closed drive reverse; K1 disconnect, the drive stops running.

2: 3-wire control mode 1: This mode DI3 is the enable terminal and the direction is controlled by DI1 and DI2 respectively.

The function codes are set as follows:

Function code	Name	Set value	Functional Description
P4-11	Terminal command method	2	Three-linear 1
P4-00	DI1 terminal function selection	1	Run enable (computing)
P4-01	DI2 terminal function selection	2	Forward and reverse running directions
P4-02	DI3 terminal function selection	3	Three-wire operation control

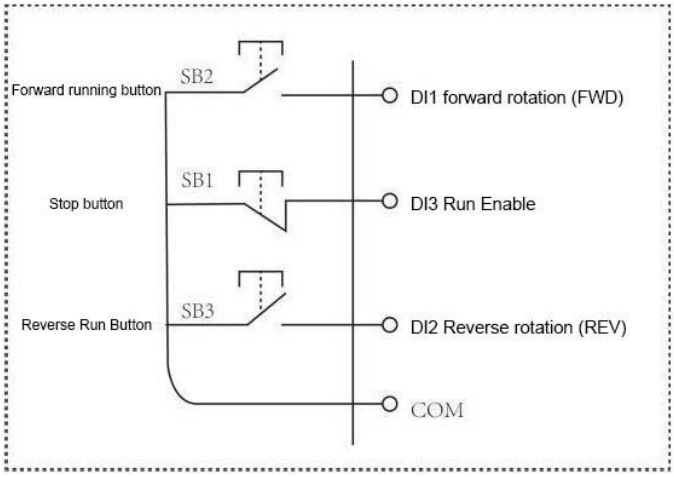

Three-wire control mode 1

As shown in the figure above, this control mode in the SB1 button closed state, press the SB2 button drive forward, press the SB3 button drive reversal, SB1 button disconnect the instant drive stop. In normal startup and operation, the SB1 button must be kept closed, and the commands of the SB2 and SB3 buttons take effect along the closed action, and the operation status of the drive is subject to the last key action of the three buttons.

3: 3-wire control mode 2: DI3 of this mode is the enable terminal, the operation command is given by DI1, and the direction is determined by the status of DI2.

The function codes are set as follows.

Function code	Name	Set value	Functional Description
P4-11	Terminal command method	3	3-Line 2
P4-00	DI1 terminal function selection	1	Run enable (computing)
P4-01	DI2 terminal function selection	2	Forward and reverse running directions
P4-02	DI3 terminal function selection	3	Three-wire operation control

K	Running direction
0	Forward motion (mechanics)
1	Invert (upside-down, inside-out, back-to-front, white to black etc)

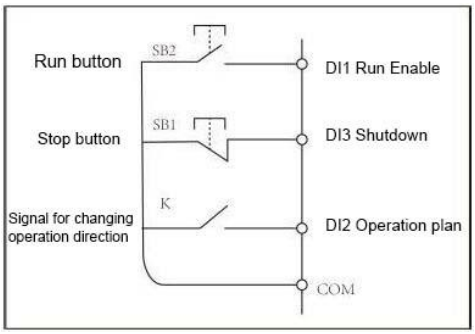

Three-wire control mode 2

As shown in the figure above, this control mode in the SB1 button closed state, press the SB2 button drive running, K disconnect drive forward, K closed drive reverse; SB1 button disconnect momentary drive stop. In normal startup and operation, the SB1 button must be kept closed, and the command of the SB2 button takes effect along the closing action.

P4-12	Terminal UP/ DOWN Rate of change	Factory value	1.00Hz/s
	Setting range	0.01Hz/s~65.535Hz/s	

Used to set the speed of frequency change, i.e., the amount of frequency change per second, when the terminal UP/DOWN adjusts the set frequency.

P4-13	Analog input curve 1 Minimum input	Factory value	0.00V
	Setting range	0.00V~P4-15	
P4-14	Analog Input Curve 1 Minimum Input Correspondence Setting	Factory value	0.0 per cent
	Setting range	-100.00%~100.0%	
P4-15	Analog input curve 1 Maximum input	Factory value	10.00V
	Setting range	P4-13~10.00V	
P4-16	Analog input curve 1 Maximum input Corresponding Settings	Factory value	100 .0 per cent
	Setting range	-100.00%~100.0%	
P4-17	AI1 filter time	Factory value	0.10s
	Setting range	0.00s~10.00s	

The above function codes are used to set, the relationship between the Analog input voltage and the set value it represents.

When the analog input voltage is greater than the set "Maximum Input" (P4-15), the analog voltage is calculated according to "Maximum Input"; similarly, when the analog input voltage is less than the set "Minimum Input" (P4-13), the analog voltage is calculated as the minimum input or 0.0 according to the setting of "Analog Input Below Minimum Input Setting Selection" (P4-34). Similarly, if the Analog input voltage is less than the set "Minimum input" (P4-13), the Analog input voltage is calculated as the minimum input or 0.0% according to the setting of "Analog input lower than minimum input setting selection" (P4-34).

When the Analog input is a current input, 1mA current is equivalent to 0.5V.

AI1 input filtering time is used to set the software filtering time of AI1. When the Analog quantity on site is easily interfered, please increase the filtering time to make the detected Analog quantity stable; however, the larger the filtering time is, the slower the response to the Analog quantity detected will be, so how to set it needs to be weighed in accordance with the actual application situation.

The Analog setting of 100.0% has a different meaning of the nominal value in different applications, please refer to the description in each application section. The following diagrams show two typical settings:

P4-18	AI curve 2 minimum input	Factory value
	Setting range	0.00V~P4-20
P4-19	AI Curve 2 Minimum Input Correspondence Setting	Factory value
	Setting range	-100.0%~+100.0%

P4-20	AI Curve 2 Maximum Input	Factory value	
	Setting range	P4-18~+10.00V	
P4-21	AI curve 2 maximum input setting	Factory value	
	Setting range	-100.0%~+100.0%	
P4-22	AI2 Filter time	Factory value	
	Setting range	0.00s~10.00s	
P4-23	AI curve 3 minimum input	Factory value	
	Setting range	-10.00V~P4-23	
P4-24	AI Curve 3 Minimum Input Correspondence Setting	Factory value	
	Setting range	-100.0%~+100.0%	
P4-25	AI Curve 3 Maximum Input	Factory value	
	Setting range	P4-23~+10.00V	
P4-26	Analog Input Curve 3 Maximum Input Correspondence Setting	Factory value	100.0%
	Setting range	-100.00%~100.0%	
P4-27	AI3 Filter time	Factory value	0.50s
	Setting range	0.00s~10.00s	

For the function and use of curve 3, refer to the description of curve 1.

P4-28	PULSE Minimum Input	Factory value	0.00kHz
	Setting range	00.00kHz~P4-30	
P4-29	PULSE Minimum input setting	Factory value	0.0 per cent
	Setting range	-100.00%~100.0%	
P4-30	PULSE Maximum Input	Factory value	50.00kHz
	Setting range	P4-28~50.00kHz	
P4-31	PULSE Maximum input setting	Factory value	100 .0 per cent
	Setting range	-100.00%~100.0%	
P4-32	PULSE Filter time	Factory value	0.10s
	Setting range	0.00s~10.00s	

This group of function codes is used to set, the relationship between the DI5 pulse frequency and the corresponding setting. The pulse frequency can only be entered into the driver via the DI5 channel.

The application of this group of functions is similar to curve 1, please refer to the description of curve 1.

P4-33	Analog input curve selection		Factory value	321
	Setting range	Ones place	AI1 Curve Selection	
		1	Curve 1 (2 points, see P4-13~P4-16)	
		2	Curve 2 (2 points, see P4-18~P4-21)	
		3	Curve 3 (2 points, see P4-23~P4-26)	
		4	Curve 4 (4 points, see H6-00~H6-07)	
		5	Curve 5 (4 points, see H6-08~H6- 15)	
		Tens place	AI2 Curve selection (1~5, same as above)	
		Hundreds place	AI3 Curve selection (1~5, same as above)	

The first, second and third digits of this function code are used to select the setting curves corresponding to Analog inputs AI1, AI2 and AI3 respectively. Each of the three Analog inputs can be used to select any one of the five curves.

Curve 1, Curve 2 and Curve 3 are all 2-point curves and are set in the F4 group of function codes, while Curve 4 and Curve 5 are both 4-point curves and need to be set in the H6 group of function codes.

The standard unit of the drive provides 2 Analog inputs, the use of AI3 requires the configuration of multi-function input and output expansion card.

P4-34	Analog input below minimum input setting selection		Factory value	000
	Setting range	Ones place	AI1 Below minimum input setting selection	
		0	Corresponding Minimum Input Setting	
		1	0.0 per cent	
		Tens place	AI2 Below minimum input setting selection (0~1, same as above)	
		Hundreds place	AI3 Below minimum input setting selection (0~1, same as above)	

This function code is used to set the setting for the Analog input when the Analog input voltage is less than the set "minimum input".

The digits, tens and hundreds of this function code correspond to the Analog inputs AI1, AI2 and AI3 respectively.

If 0 is selected, when the Analog input is lower than the "Minimum input", the setting corresponding to the Analog input is the "Minimum input setting" (P4-14, P4-19, P4-24) of the curve determined by the function code.

If 1 is selected, when the Analog input is below the minimum input, the corresponding setting for that Analog is 0.0%.

P4-35	DI1 Delay time	Factory value	0.0s
	Setting range	0.0s~3600.0s	
P4-36	DI2 Delay Time	Factory value	0.0s
	Setting range	0.0s~3600.0s	
P4-37	DI3 Delay	Factory value	0.0s
	Setting range	0.0s~3600.0s	

Used to set the delay time for the driver to respond to a change in the state of the DI digital input terminals when that change occurs.

Currently, only DI1, DI2, and DI3 have the function to set the delay time.

P4-38	DI Digital Input Terminal Valid Mode Selection 1		Factory value	00000
	Setting range	Ones place	DI1 terminal valid state setting	
		0	Active High	
		1	Active Low	
		Tens place	DI2 terminal valid state setting (0~1, same as above)	
		Hundreds place	DI3 terminal valid state setting (0~1, same as above)	
		Thousands place	DI4 terminal valid state setting (0~1, same as above)	
		Ten thousands place	DI5 terminal valid state setting (0~1, same as above)	
P4-39	DI terminal active mode selection 2		Factory value	00000
	Setting range	Ones place	DI6 terminal valid state setting	
		0	Active High	
		1	Active Low	
		Tens place	DI7 terminal valid state setting (0 to 1, same as above)	
		Hundreds place	DI8 terminal valid state setting (0~1, same as above)	
		Thousands place	DI9 terminal valid state setting (0~1, same as above)	
		Ten thousands place	DI10 Terminal valid state setting (0~1, same as above)	

Used to set the valid state mode of the DI digital input terminals.

When selected as active high, the corresponding DI digital input terminal is valid when connected to COM and invalid when disconnected.

When selected as active low, the corresponding DI digital input terminal is invalid when connected to COM and valid when disconnected.

Group P5 Output terminals

This series of driver is equipped with 1 multi-function Analog output terminal (AO1), 1 multi-function digital output terminal (DO1), 1 multi-function relay output terminal (TA1-TB1-TC1，TB2-TC2) as standard. The expansion card is equipped with 1 high-speed pulse output terminal (FM), 1 multi-function Analog output terminal (AO2) and 2 multi-function relay output terminals (TB4-TC4, TB3-TC3).

P5-00	FM and AO2 terminal output mode selection	Position: FM terminal function selection 0: Pulse output 1: Switching output (Expansion card TB4-TC4) Ten positions: AO2 terminal function selection 0: Analog output 1: Switching output (Expansion card TB3-TC3)	11	☆

FM terminal and TB4-TC4 are two-selective multiplexed function terminals, which are selected by the J2 jumper on the expansion card, and AO2 and TB3-TC3 are two-selective multiplexed function terminals, which are selected by the J3 jumper on the expansion card.

When outputting FM as a pulse, the maximum frequency of the output pulse is 100kHz, see P5-06 for FM related functions.

P5-01	Relay output function selection (Expansion card TB4-TC4)	0: No output 1: Inverter in operation 2: Fault output (fault for free stop) 3: Frequency level detection FDT1 output 4: Frequency reached 5: Zero speed operation in progress (no output at shutdown) 6: Motor overload pre-warning 7: Inverter overload pre-warning 8: Arrival of set notation value 9: Arrival of specified notation value 10: Length reached 11: PLC cycle complete 12: Accumulated running time reached 13: Frequency limit in progress 14: Torque limit in progress 15: Ready for operation 16: AI1 > AI2 17: Upper limit frequency reached 18: Lower limit frequency arrival (operation related) 19: Undervoltage status output 20: Communication setting 21: Positioning complete (reserved) 22: Positioning proximity (reserved) 23: In zero-speed operation 2 (also output during shutdown) 24: Cumulative power-up time reached 25: Frequency level detection FDT2 output 26: Frequency 1 arrival output 27: Frequency 2 reaches output 28: Current 1 reaches output 29: Current 2 arrives at output	0	☆
P5-02	Control board relay function selection (TA1-TB1-TC1)		2	☆
P5-03	Relay output function selection (TB2-TC2)		0	☆
P5-04	DO1 output function selection		1	☆
P5-05	Relay Output Function Selection (Expansion Card TB3-TC3)		4	☆

		30: Timing arrives at output 31: AI1 input overrun 32: Dropout in progress 33: In reverse operation 34: Zero current state 35: Module temperature reached 36: Output current overrun 37: Lower frequency limit reached (output even for shutdown) 38: Alarm output (all faults) 39: Motor over-temperature pre-warning 40: Time of this operation reached 41: Non-undervoltage fault output (free stop fault)		

The above 5 function codes are used to select the function of 5 digital outputs, where TA1-TB1-TC1 are relays on the control board. The multifunction output terminal functions are described as follows:

Set value	Functionality	Instructions
27	Frequency 2 arrives at the output	Please refer to the description of function codes P8-32 and P8-33.
28	Current 1 arrives at the output	Refer to function codes P8-38 and P8-39 for instructions.
29	Current 2 arrives at the output	Please refer to function codes P8-40 and P8-41 for instructions.
30	Timed Arrival Output	When the timing function selection (P8-42) is valid, the ON signal is output after the drive's current operation time reaches the set timing time.
31	AI1 input overrun	When the value of Analog input AI1 is greater than P8-46 (AI1 input protection upper limit) or less than P8-45 (AI1 input protection lower limit), the ON signal is output.
32	Overloaded	The ON signal is output when the driver is off.
33	Running in reverse	When the drive is in reverse operation, the ON signal is output.
34	Zero current state	Please refer to the description of function codes P8-28 and P8-29
35	Module temperature reaches	When the inverter module heat sink temperature (P7-07) reaches the set module temperature arrival value (P8-47), the ON signal is output.
36	Software current overrun	Refer to function codes P8-36 and P8-37 for instructions.
37	Lower frequency limit reached (output even when stopped)	When the operating frequency reaches the lower limit frequency, the ON signal is output. This signal is also ON in the shutdown state.
38	Alarm output	Drive alarm output when a drive fault occurs and the

		handling mode for that fault is continue operation.
39	Motor over-temperature alarm	When the motor temperature reaches P9-58 (motor overheat pre-alarm threshold), the ON signal is output. (Motor temperature can be checked by U0-34)
40	This run time arrives	The ON signal is output when the drive starts operation this time for longer than the time set by P8-53.
41	Non-undervoltage fault output	When a non-undervoltage fault fault occurs and the drive stops, the ON signal is output.
42	Motor 1 inverter contactor output	Motor 1 inverter contactor output control
43	Motor 1 industrial contactor output	Motor 1 industrial frequency contactor output control
44	Motor 2 inverter contactor output	Motor 2 inverter contactor output control
45	Motor 2 industrial frequency contactor output	Motor 2 industrial frequency contactor output control
46	Motor 3 inverter contactor output	Motor 3 inverter contactor output control
47	Motor 3 industrial frequency contactor output	Motor 3 industrial frequency contactor output control

P5-06	FMP output function selection (pulse output terminal)	Factory value	0
P5-07	AO1 output function selection	Factory value	0
P5-08	AO2 output function selection	Factory value	1

FMP terminal output pulse frequency range is 0.01kHz~P5-09 (FMP output maximum frequency), P5-09 can be

Set between 0.01kHz to 100.00kHz.

The Analog outputs AO1 and AO2 have an output range of 0V~10V, or 0mA~20mA.

The ranges of pulse outputs or Analog outputs are related to the calibration of the corresponding functions as shown in the table below:

Set value	**Functionality**	**Functions corresponding to pulse or Analog output 0.0% to 100%**
0	Operating frequency	0~ Maximum Output Frequency
1	Setting frequency	0~ Maximum Output Frequency
2	Output Current	0~2 times rated motor current
3	Output torque (absolute)	0~2 times rated motor torque
4	Output power	0~2 times rated power
5	Output voltage	0~1.2 times drive rated voltage
6	PULSE Pulse Input	0.01kHz~100.00kHz

7	AI1	0V~10V
8	AI2	0V~10V (or 0~20mA)
9	AI3	0V~10V
10	Lengths	0~ Maximum Setting Length
11	Numerical value	0~Maximum count value
12	Communication Settings	0.0%~100.0%
13	Motor speed	0~ Rotational speed corresponding to maximum output frequency
14	Output Current	0.0A~1000.0A
15	Output voltage	0.0V~1000.0V
16	Output torque (actual)	-2 times rated motor torque ~ 2 times rated motor torque

P5-09	FMP Output Maximum Frequency	Factory value	50.00kHz
	Setting range	0.01kHz~100.00kHz	

This function code is used to select the maximum frequency value of the output pulse when the FM terminal is selected as a pulse output.

P5-10	AO1 zero bias factor	Factory value	0.0%
	Setting range	-100.0%~+100.0%	
P5-11	AO1 gain	Factory value	1.00
	Setting range	-10.00~+10.00	
P5-12	AO2 zero bias factor	Factory value	0.00%
	Setting range	-100.0%~+100.0%	
P5-13	AO2 Gain	Factory value	1.00
	Setting range	-10.00~+10.00	

The above function codes are generally used to correct the zero drift of the Analog output and the deviation of the output amplitude. They can also be used to customize the desired AO output curve.

If the zero bias is denoted by "b", the gain is denoted by k, the actual output is denoted by Y, and the standard output is denoted by X, then the actual output is: $Y = kX + b$.

Among them, the zero bias coefficient of AO1 and AO2 is 100% corresponding to 10V (or 20mA), and the standard output refers to the quantity indicated by outputting 0V~10V (or 0mA~20mA) corresponding to the Analog output without zero bias and gain correction.

For example, if the Analog output is the operating frequency, and you want to output 8V when the frequency is 0, and 3V when the frequency is the maximum frequency, then the gain shall be set to "-0.50" and the zero bias shall be set to "80%".

P5-17	FMR Output Delay Time	Factory value	0.0s
	Setting range	0.0s~3600.0s	
P5-18	TA1-TB1-TC1 Output Delay Time	Factory value	0.0s

	Setting range	0.0s~3600.0s	
P5-19	TA2-TC2 output delay time	Factory value	0.0s
	Setting range	0.0s~3600.0s	
P5-20	DO1 Output delay time	Factory value	0.0s
	Setting range	0.0s~3600.0s	
P5-21	DO2 output delay time	Factory value	0.0s
	Setting range	0.0s~3600.0s	

Set the delay time between a change in state and the actual output change for output terminals FMR, Relay 1, Relay 2, DO1 and DO2.

P5-22	DO Output Terminal Valid State Selection		Factory value	00000
	Setting range: 0:Positive Logic 1:Anti Logic	Ones place	FMR active state selection (0~1)	
		Tens place	TA1-TB1-TC1 active state setting (0~1)	
		Hundreds place	TA3-TB3-TC3 terminal valid state setting (0~1)	
		Thousands place	DO1/TA2-TB2-TC2 Terminal Effective State Setting (0~1)	
		Ten thousands place	DO2/TA4-TB4-TC4 terminal effective state setting (0~1)	

Defines the output logic for the output terminals FMR, TA1-TB1-TC1, TA2-TC2, DO1 and DO2 (some models are extended with the relay output TA4-TB4-TC4).

0: Positive logic, digital output terminals and the corresponding common terminal are connected to the valid state, disconnected to the invalid state; 1: Reverse logic, digital output terminals and the corresponding common terminal are connected to the invalid state, disconnected to the valid state.

P5-24	FMR stop output delay time	Factory value	0.0s
	Setting range	0.0s~3600.0s	
P5-25	TA1-TB1-TC1 Stop Output Delay Time	Factory value	0.0s
	Setting range	0.0s~3600.0s	
P5-26	TA2-TC2 Stop Output Delay Time	Factory value	0.0s
	Setting range	0.0s~3600.0s	
P5-27	DO1 Stop output delay time	Factory value	0.0s
	Setting range	0.0s~3600.0s	
P5-28	DO2 stop output delay time	Factory value	0.0s
	Setting range	0.0s~3600.0s	

Set the delay time for output terminals FMR, Relay 1, Relay 2, DO1 and DO2 , to stop the output.

Group P6 Start-stop control

P6-00	Activation method		Factory value	0
	Setting range	0	Direct launch	
		1	Speed tracking restart	
		2	Pre-excitation start (AC asynchronous motors)	

0: Direct start

If Start DC Brake Time is set to 0, the drive operates from the start frequency. If the start DC braking time is not set to 0, the DC braking is applied first and then the drive operates from the start frequency. Applicable to small inertia loads where the motor may rotate during startup.

1: Speed tracking restart

The drive first judges the speed and direction of the motor and then starts the motor at the tracked motor frequency, implementing smooth and shock-free starting of the rotating motor. It is suitable for instantaneous power failure and restart of large inertia loads. In order to ensure the performance of speed tracking restart, it is necessary to accurately set the parameters of motor P1 group.

2: Asynchronous motor pre-excitation start

Valid only for asynchronous motors, used to establish the magnetic field before running the motor. See function codes P6-05 and P6-06 for pre-excitation current and pre-excitation time.

If the pre-excitation time is set to 0, the drive cancels the pre-excitation process and starts from the start frequency. If the pre-excitation time is not set to 0, the motor is pre-excited before starting, which can improve the dynamic response performance of the motor.

P6-01	Rotation speed tracking method		Factory value	0
	Setting range	0	Starting with the downtime frequency	
		1	From zero speed.	
		2	Starting from the maximum frequency	
		3	Current motor speed and direction	

In order to complete the speed tracking process in the shortest possible time, the driver is selected to track the motor speed:

0: Tracking down from the frequency at the time of the blackout, which is usually chosen.

1: Tracking upwards from 0 frequency, used in the case of a long power outage and restart.

2: Downward tracking from maximum frequency, generally used for generating loads.

3: Motor current speed and direction tracking, generally used for occasions where the motor has reverse rotation operation before startup, faster tracking speed, limited to V/F control mode.

P6-02	RPM tracking fast and slow	Factory value	20
	Setting range	1~100	

Speed tracking restart selects how fast or slow the speed tracking is.

The larger the parameter, the faster the tracking speed. However, setting it too large may cause unreliable tracking.

P6-03	Start-up frequency	Factory value	0.00Hz
	Setting range	0.00Hz~10.00Hz	

P6-04	Start-up frequency hold time	Factory value	0.0s
	Setting range	0.0s~100.0s	

To ensure motor torque at startup, set the appropriate starting frequency. In order to build up the magnetic flux sufficiently when the motor starts, it is necessary to keep the starting frequency for a certain period of time.

The start frequency P6-03 is not limited by the lower limit frequency. However, if the set target frequency is less than the start frequency, the drive will not start and will be in standby mode.

The start frequency hold time does not work during forward and reverse switching.

The start frequency hold time is not included in the acceleration time, but is included in the run time of the simple PLC.

Example 1:

P0-03 = 0 Frequency source is digitally given

P0-08 = 2.00Hz Digital setting of the frequency to 2.00Hz

P6-03 = 5.00 Hz Start-up frequency of 5.00Hz

P6-04 = 2.0s Start frequency hold time of 2.0s

At this time, the driver will be in standby mode and the driver output frequency will be 0.00Hz.

Example 2:

P0-03 = 0 Frequency source is digitally given

P0-08 = 10.00Hz Digital setting of the frequency to 10.00Hz

P6-03 = 5.00 Hz Start-up frequency of 5.00Hz

P6-04 = 2.0s Start frequency hold time of 2.0s

At this point, the drive accelerates to 5.00Hz for 2.0s and then accelerates to a given frequency of 10.00Hz.

P6-05	Starting DC braking current/pre-excitation current	Factory value	0 per cent
	Setting range	0%~100%	
P6-06	Start DC braking time/pre-excitation time	Factory value	0.0s
	Setting range	0.0s~100.0s	

Starting DC braking is generally used to bring a running motor to a stop before starting it. Pre-excitation is used to establish the magnetic field of an asynchronous motor before starting to improve response speed.

Starting DC braking is effective only when the starting mode is direct start. In this case, the drive first applies DC braking according to the set start DC braking current, and then starts operation after the start DC braking time. If the set DC braking time is 0, the drive starts directly without DC braking. The higher the DC braking current, the higher the braking force.

If the start-up mode is asynchronous pre-excitation start-up, the drive will first pre-establish the magnetic field according to the set pre-excitation current, and then start operation after the set pre-excitation time. If the set pre-excitation time is 0, the drive will start directly without pre-excitation.

The starting DC braking current/pre-excitation current, relative to the base value, has two scenarios.

1, when the motor rated current is less than or equal to 80% of the drive rated current, is relative to the motor rated current as a percentage base value.

2, when the motor rated current is greater than 80% of the drive rated current, is relative to 80% of the drive rated current as a percentage base value.

P6-07	Acceleration and deceleration mode		Factory value	0
	Setting range	0	Linear acceleration and deceleration	
		1	S-curve acceleration/deceleration A	
		2	S-curve acceleration/deceleration B	

Selects how the frequency of the drive changes during startup and stopping.

0: linear acceleration and deceleration

The output frequency increases or decreases in a straight line. 4 types of acceleration and deceleration times are available for the HV320S series. Selectable via multi-function digital input terminals (P4-00 to P4-08).

1: S-curve acceleration and deceleration A

The output frequency increases or decreases in accordance with the S-curve. the S-curve is used in places where gentle starting or stopping is required, e.g. lifts, conveyor belts, etc. Function codes P6-08 and P6-09 define the time ratio of the start and end segments of the acceleration and deceleration of the S-curve, respectively.

2: S-curve acceleration/deceleration B

In this S-curve acceleration and deceleration B, the rated frequency of the motor

f b is always an inflection point of the S-curve. This is shown in the figure below. This is generally used when rapid acceleration or deceleration is required in high-speed areas above the rated frequency.

Acceleration and deceleration time when the set frequency is above the rated frequency:

where f is the set frequency, f b is the rated frequency of the motor, and T is the time to accelerate from the 0 frequency to the rated frequency bf.

P6-08	Proportion of time at the beginning of the S-curve	Factory value	30.0 per cent
	Setting range	0.0 per cent ~ (100.0 per cent - P6-09)	
P6-09	Proportion of time at the end of the S-curve	Factory value	30.0 per cent
	Setting range	0.0%~(100.0%-P6-08)	

Function codes P6-08 and P6-09 define, respectively, the proportion of the start and end time of the S-curve acceleration and deceleration A. The two function codes have to satisfy: P6-08 + P6-09 ≤ 100.0%.

In the following figure, t1 is the parameter defined by parameter P6-08, during which the slope of the output frequency change gradually increases. t2 is the time defined by parameter P6-09, during which the slope of the output frequency change gradually changes to 0 . In the time between t1 and t2, the slope of the output frequency change is fixed, i.e., linear acceleration and deceleration is performed in this interval.

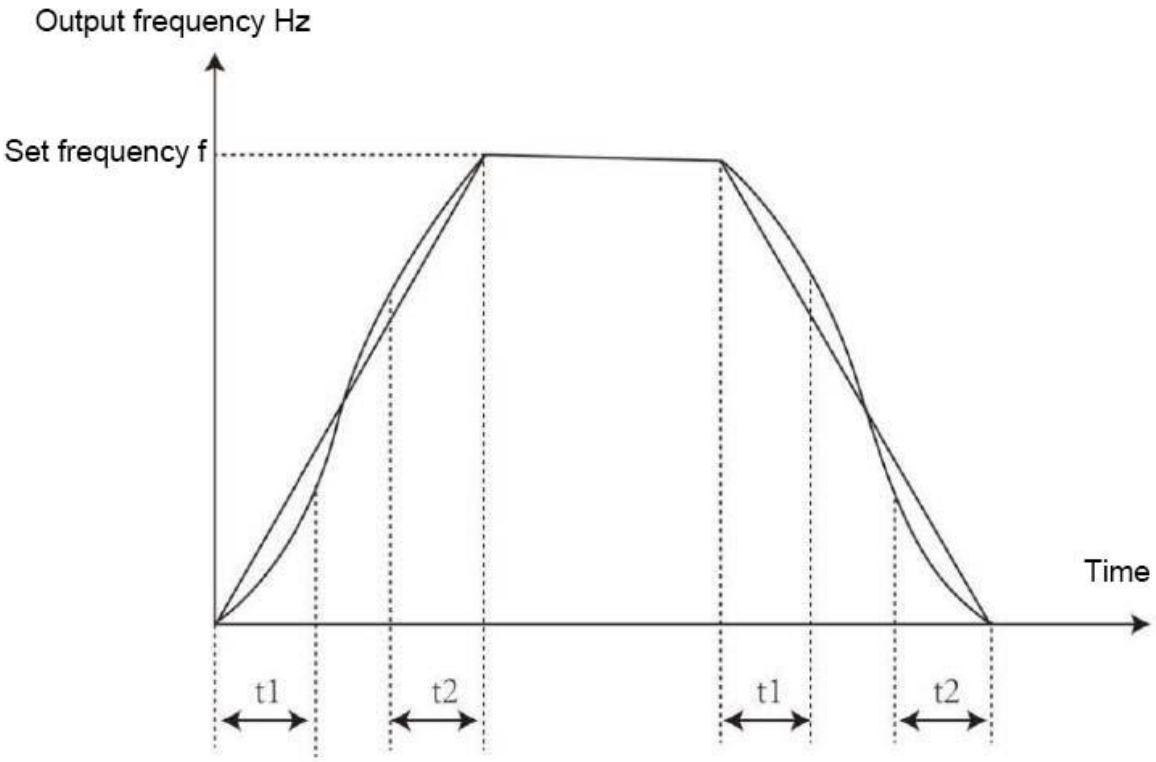

S-curve acceleration and deceleration A schematic diagram

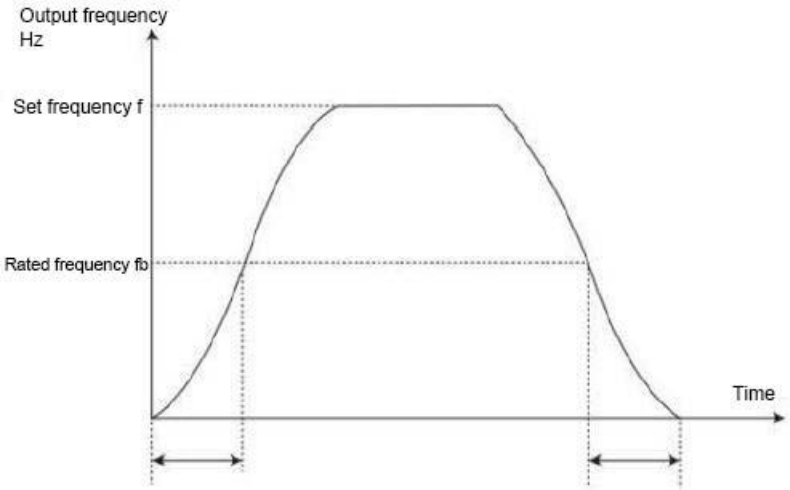

S-curve acceleration/deceleration B schematic

P6-10	Shutdown mode		Factory value	0
	Setting range	0	Stall	
		1	Free stop	

0: Decelerate and stop

When the stop command is valid, the drive reduces the output frequency according to the deceleration time, and stops after the frequency drops to 0.

1: free stop

When the stop command is valid, the drive terminates the output immediately, at which point the motor stops freely according to mechanical inertia.

P6-11	Stopping DC braking start frequency	Factory value	0.00Hz
	Setting range	0.00Hz~ max. frequency	
P6-12	Shutdown DC braking wait time	Factory value	0.0s
	Setting range	0.0s~36.0s	
P6-13	Stopping DC braking current	Factory value	0 per cent
	Setting range	0%~100%	
P6-14	Stopping DC braking time	Factory value	0.0s
	Setting range	0.0s~36.0s	

Stopping DC braking start frequency: During deceleration and stopping, when the operating frequency is reduced to this frequency, the DC braking process starts.

Shutdown DC Brake Wait Time: After the operating frequency is reduced to the shutdown DC brake start frequency, the drive stops output for a period of time before starting the DC brake process. It is used to prevent overcurrent and other faults that may be caused by starting DC braking at higher speeds. Stopping DC Braking Current: The stopping DC braking current, relative to the base value, has two cases.

1, when the motor rated current is less than or equal to 80% of the drive rated current, is relative to the motor rated current as a percentage base value.

2, when the motor rated current is greater than 80% of the drive rated current, is relative to 80% of the drive rated current as a percentage base value.

Stop DC braking time: The time for which the DC braking volume is held. A value of 0 cancels the DC braking process.

The stopping DC braking process is shown in the figure below.

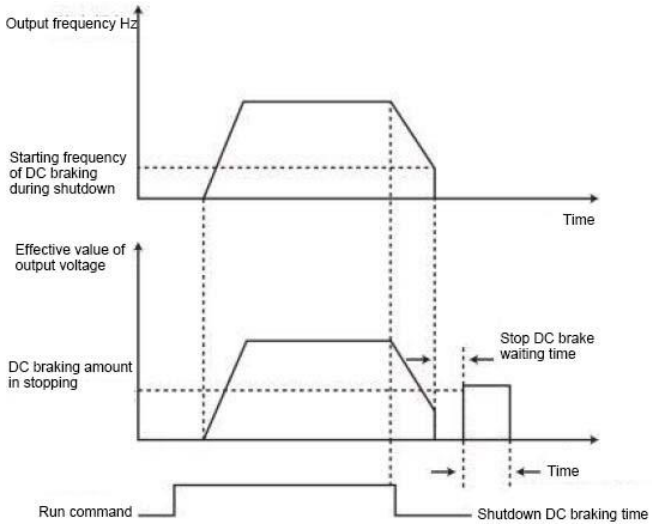

Schematic diagram of stopping DC braking

P6-15	Brake utilization rate	Factory value	100%
	Setting range	0%~100%	

Valid only for drives with built-in brake unit.

Used to adjust the duty cycle of the brake unit, high brake usage, the brake unit action duty cycle is high, the braking effect is strong, but the

It is the braking process drive bus voltage that fluctuates.

P6-16	Brake unit switch-on voltage value	Factory value	Determination of model
	Setting range	200.0V~2000.0v	

Starting voltage of the built-in brake unit operation Vbreak, the setting reference for this voltage value:

800 ≥ Vbreak ≥ (1.414Vs+30)

Vs - AC supply voltage input to the drive

Note: Improper setting of this voltage may cause the built-in brake unit to operate incorrectly!

P6-18	Speed tracking current	Factory value	Determination of model
	Setting range	30%~200%	

The maximum current during speed tracking is limited to the "Speed tracking current" setting. If the setting value is too small, the effect of speed tracking will deteriorate.

P6-19	Speed tracking closed loop current KP	Factory value	500
	Setting range	10~1000	
P6-20	Speed tracking closed loop current KI	Factory value	800
	Setting range	5~1000	
P6-21	Speed tracking voltage rise time	Factory value	1.0
	Setting range	0~3.0	
P6-22	Demagnetisation time	Factory value	1.00
	Setting range	0~5.00	

Speed tracking sets the speed tracking closed-loop current ratio as well as integral gain, speed tracking voltage rise time, demagnetisation time; in vector mode, speed tracking start (P6-00=1) does not allow the inverter to be started when there is residual magnetism in the motor, and the demagnetisation time, P6-22, is too small and may easily lead to over-voltage faults.

The demagnetisation time is the minimum interval between stopping and starting, this function code will only take effect when the speed tracking function is enabled, and a set value too small will easily cause an over-voltage fault.

Group P7 Keyboard and Display

I. Functional parameters P7-00 FM resolution selection

Function code	Name	Setting range	Factory value	Variation
P7-00	FM resolution selection	0:0.01Hz 1:0.1Hz 2:1Hz 3:10Hz	2	☆

Modify the resolution of the frequency adjustment with the keypad encoder by modifying P7-00.

<table>
<tr><td rowspan="7">P7-01</td><td colspan="2">JOG/QUICK key function selection</td><td colspan="2">Factory value</td><td colspan="3">3</td></tr>
<tr><td rowspan="6">Setting range</td><td>0</td><td colspan="5">Menu mode switching</td></tr>
<tr><td>1</td><td colspan="5">Switching between Operating panel command channel and remote command channel (terminal command channel or communication command channel)</td></tr>
<tr><td>2</td><td colspan="5">Forward and reverse switching</td></tr>
<tr><td>3</td><td colspan="5">Pivot</td></tr>
<tr><td>4</td><td colspan="5">Inversion point movement</td></tr>
<tr><td rowspan="3">P7-02</td><td colspan="2">STOP/RESET key Function</td><td colspan="2">Factory value</td><td colspan="3">1</td></tr>
<tr><td rowspan="2">Setting range</td><td colspan="5">0 only The STOP/RESET key stop function is active during keypad operation.</td></tr>
<tr><td colspan="5">1 The STOP/RESET button is valid in all operating modes.</td></tr>
<tr><td rowspan="8">P7-03</td><td colspan="2">LED operating display parameter 1</td><td colspan="2">Factory value</td><td colspan="3">1F</td></tr>
<tr><td rowspan="7">Setting range</td><td rowspan="7">0000~FFFF</td><td>0</td><td>Operating frequency 1 (Hz)</td><td>8</td><td>DO output status</td><td rowspan="7">If you need to display the above parameters during operation, set the corresponding position to 1, convert the binary number to hexadecimal and set P7-03.</td></tr>
<tr><td>1</td><td>Setting frequency (H)</td><td>9</td><td>AI1 Voltage (V)</td></tr>
<tr><td>2</td><td>Busbar voltage (V)</td><td>10</td><td>AI1 Voltage (V)</td></tr>
<tr><td>3</td><td>Output Voltage (V)</td><td>11</td><td>AI3 Voltage (V)</td></tr>
<tr><td>4</td><td>Output current (A)</td><td>12</td><td>numerical value</td></tr>
<tr><td>5</td><td>Output power (kW)</td><td>13</td><td>length value</td></tr>
<tr><td>6</td><td>Output torque (%)</td><td>14</td><td>Load speed display</td></tr>
<tr><td rowspan="3">P7-04</td><td colspan="2">LED operating display parameter 2</td><td colspan="2">Factory value</td><td colspan="3">0</td></tr>
<tr><td rowspan="2">Setting</td><td rowspan="2">0000~FFFF</td><td>0</td><td>PID feedback</td><td>8</td><td>linear velocity</td><td rowspan="2">If you need to display each of</td></tr>
<tr><td>1</td><td>PLC stage</td><td>9</td><td>Current power-up</td></tr>
</table>

	range					time (Hour)	the above parameters during operation, set its corresponding position to 1, convert this binary number to hexadecimal and set it to P7-04.
			2	PULSE Input Pulse Frequency (kHz)	10	Current running time (Min)	
			3	Operating frequency 2 (Hz)	11	PULSE input pulse frequency (Hz)	
			4	Remaining running time	12	Communication set value	
			5	AI1 voltage before correction (V)	13	Encoder feedback speed (Hz)	
			6	AI2 voltage before correction (V)	14	Main frequency X display (Hz)	
			7	AI3 Voltage before correction (V)	15	Auxiliary frequency Y display (Hz)	

Run Display Parameters to set the parameters that can be viewed when the drive is in the run state.

The maximum number of status parameters that can be viewed is 32, and the status parameters to be displayed are selected according to the binary digits of each of the P7-03 and P7-04 parameter values, with the display order starting from the lowest digit of P7-03.

P7-05	LED stop display parameters		Factory value	0	
	Setting range	0000~FFFF	Setting frequency (Hz)	8	Length value
			Busbar voltage (V)	9	PLC stage
			DI input status	10	Load speed
			DO output status	11	PID Setting
			AI1 Voltage (V)	12	PULSE Input Pulse Frequency (KHz)
			AI2 Voltage (V)	13	Reservation
			AI3 Voltage (V)	14	Reservation
			Numerical value	15	Reservation
			If you need to display each of the above parameters during shutdown, set their corresponding positions to 1, and set these two parameters to 1. Progressive numbers converted to hexadecimal are set at P7-05.		
P7-06	Load Speed Display Factor		Factory value	1.0000	
	Setting range		0.0001~6.5000		

This parameter is used to adjust the correspondence between the output frequency of the driver and the load speed when the load speed needs to be displayed. Specific

Refer to the description of P7-12 for correspondence.

P7-07	Inverter module heat sink temperature	Factory value	0
	Setting range	0.0°C~100.0°C	

Displays the temperature of the inverter module IGBT.

The inverter module IGBT over-temperature protection value varies from model to model.

P7-08	Cumulative running time	Factory value	0h
	Setting range	0h~65535h	

Display the cumulative runtime of the drive, non-resettable time.

P7-09	Cumulative running time	Factory value	0h
	Setting range	0h~65535h	

The accumulated running time of the drive is displayed. When the run time reaches the set run time P8-17, the drive multi-function digital output function (12) outputs the ON signal.

P7-10	Product number		Factory value	
	Setting range		Drive Product Number	
P7-11	Software version number		Factory value	
	Setting range		Control board software version number.	
P7-12	Load speed display in decimal places		Factory value	21
	Setting range	20	0 decimal place	
		21	1 decimal place	
		22	2 decimal places	
		23	3 decimal places	

Used to set the number of decimal places for the load speed display. The following is an example of how the load speed is calculated:

If the load speed display coefficient P7-06 is 2.000 and the load speed decimal digit P7-12 is 2 (2 decimal digits), when the drive is running at a frequency of 40.00Hz, the load speed is: 40.00*2.000 = 80.00 (2 decimal digits display) If the drive is in the shutdown state, then the load speed is displayed as the speed corresponding to the set frequency, i.e. "Set Load Speed". Taking the set frequency 50.00Hz as an example, the load speed in the stop state is: 50.00*2.000 = 100.00 (2-digit decimal point display).

P7-13	Cumulative power-up time	Factory value	0h
	Setting range	0h~65535h	

Displays the cumulative power-up time of the drive since it was shipped from the factory.

When this time reaches the set power-up time (P8-17), the driver multi-function digital output function (24) outputs the ON signal.

P7-14	Cumulative power consumption	Factory value	-
	Setting range	0~65535 degrees	

Displays the cumulative power consumption of the drive to date.

P7-17	The second row of LEDs shows the parameters		Factory value	0
	Setting range	0	Operating frequency1 (Hz)	
		1	Setting frequency (Hz)	
		2	Busbar voltage (V)	
		3	Output Voltage (V)	
		4	Output Current (A)	
		5	Output power (kW)	
		6	Output torque (%)	
		7	DI digital input terminal input status	
		8	DO output status	
		9	AI1 voltage (V)	
		10	AI2 Voltage (V)	
		11	AI3 Voltage (V)	
		12	Numerical value	
		13	Length value	
		14	Load speed display	
		15	PID Setting	
		16	PID feedback	

Auxiliary monitoring LED display parameters

P7-18	UP/DOWN Effective Variable Display Selection	0: Setting variable 1: Current variables UP/DOWN modifies whether the current display variable is switched to the Setting variable function.		

Group P8 Auxiliary functions

P8-00	Jog operation frequency	Factory value	2.00Hz
	Setting range	0.000Hz~ max. frequency	
P8-01	Jog acceleration time	Factory value	20.0s
	Setting range	0.0s~6500.0s	
P8-02	Jog deceleration time	Factory value	20.0s
	Setting range	0.0s~6500.0s	

Define the drive's given frequency and acceleration/deceleration time at jog.

In jog operation, the start mode is fixed as direct start mode (P6-00=0) and the stop mode is fixed as deceleration stop (P6-10=0).

P8-03	Acceleration time 2	Factory value	20.0s
	Setting range	0.0s~6500.0s	

Defines the drive's given frequency and acceleration/deceleration time at jog.

In jog operation, the start mode is fixed as direct start mode (P6-00=0) and the stop mode is fixed as deceleration stop (P6- 10=0).

P8-04	Deceleration time 2	Factory value	20.0s
	Setting range	0.0s~6500.0s	
P8-05	Acceleration time 3	Factory value	20.0s
	Setting range	0.0s~6500.0s	
P8-06	Deceleration time 3	Factory value	20.0s
	Setting range	0.0s~6500.0s	
P8-07	Acceleration time 4	Factory value	20.0s
	Setting range	0.0s~6500.0s	
P8-08	Deceleration time 4	Factory value	20.0s
	Setting range	0.0s~6500.0s	

Provide 4 sets of acceleration and deceleration times, P0-17/P0-18 and the above 3 sets of acceleration and deceleration times.

The definition of acceleration and deceleration times for the 4 groups is exactly the same, please refer to P0-17 and P0-18 for relevant instructions.

4 sets of acceleration and deceleration times can be switched and selected by different combinations of the multi-function digital input terminal DI, please refer to the relevant instructions in function codes P4-01~P4-05 for the detailed usage.

P8-09	Jump Frequency 1	Factory value	0.00Hz
	Setting range	0.000Hz~ max. frequency	
P8-10	Jump Frequency 2	Factory value	0.00Hz
	Setting range	0.00Hz~ max. frequency	

P8-11	Hopping frequency amplitude	Factory value	0.00Hz
	Setting range	0.00~ Maximum Frequency	

When the set frequency is within the jump frequency range, the actual operating frequency will run at the jump frequency closer to the set frequency.

By setting the hopping frequency, the drive can be made to avoid the mechanical resonance points of the load.

Two jump frequency points can be set. If both jump frequencies are set to 0, the jump frequency function is canceled.

Refer to the following diagram for the schematic illustration of the principle of hopping frequency and hopping frequency amplitude.

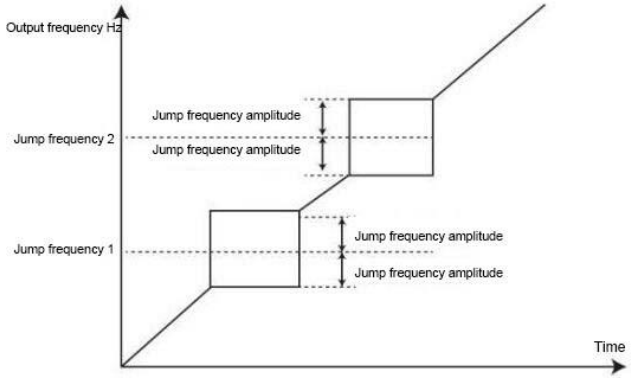

Jump Frequency Schematic

P8-12	Forward and reverse dead time	Factory value	0.00s
	Setting range	0.000s~3000.0s	

Set the transition time at output 0Hz during the drive's forward and reverse transition as shown below:

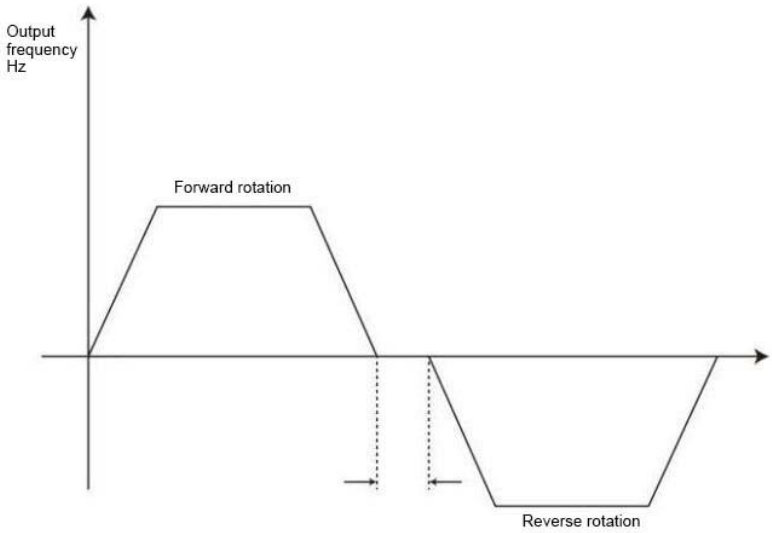

Forward and reverse dead time diagram

P8-13	Reverse Control Enable		Factory value	0
	Setting range	0	Permissible	
		1	Prohibited	

This parameter sets whether the drive is allowed to run in reverse, and to set P8-13=1 in cases where the motor is not allowed to reverse.

P8-14	Set frequency below lower limit frequency operation mode		Factory value	0
	Setting range	0	Operate at lower frequency limit	
		1	(of a prepaid mobile phone) be out of credit	
		2	zero-speed operation	

When the set frequency is lower than the lower limit frequency, the drive's operation status can be selected by this parameter.The HV320S series provides three operation modes to meet various application requirements.

P8-15	Sag control	Factory value	0.00Hz
	Setting range	0.000Hz~10.000Hz	

This function is generally used for load distribution when multiple motors are towing the same load.

Sag control is the process of making the drive output frequency drop as the load increases, so that when multiple motors are dragging the same load, the output frequency of the motor in the load drops more, so that the load on that motor can be reduced, and even loads on multiple motors can be achieved. This parameter is the value of the frequency drop in the output of the drive when it is outputting a rated load.

P8-16	Setting the cumulative power-up arrival time	Factory value	0h
	Setting range	0h~65000h	

When the accumulated power-up time (P7-13) reaches the power-up time set by P8-16, the driver's multi-function digital DO outputs ON.

Signals. An example of its application is given below:

Example: Combine the virtual DI\DO function to realize the drive failure alarm output after the set power-on time reaches 100 hours.

Programme:

Virtual DI1 terminal function set to user-defined fault 1: H1-00=44;

Virtual DI1 Terminal Valid State, set to sourced from Virtual DO1: H1-05=0000;

Virtual DO1 function, set to power-up time arrival: H1-11=24;

Set the cumulative power-up arrival time to 100 hours: P8-16=100.

Then, when the accumulated power-up time reaches 100 hours, the drive fault outputs Err27.

P8-17	Setting the cumulative running arrival time	Factory value	0h
	Setting range	0h~65000h	

Used to set the runtime of the drive.

When the accumulated run time (P7-09) reaches this set run time, the drive multi-function digital DO outputs the ON signal.

P8-18	Startup Protection Selection		Factory value	0
	Setting range	0	Unprotected	
		1	Safeguard	

This parameter relates to the safety protection features of the drive.

If this parameter is set to 1, if the run command is valid at the moment of power-up of the drive (e.g., the terminal run command is closed before power-up), the drive does not respond to the run command, and the run command must be removed once before the drive responds after the run command is valid again. In addition, if this parameter is set to 1, if the run command is valid at the time of drive fault reset, the drive does not respond to the run command either, and the run command must be removed before the run protection state can be removed.

Setting this parameter to 1 prevents the danger of unknowingly having the motor respond to a run command at power-up or during a fault reset.

P8-19	Frequency detection value (FDT1)	Factory value	50.00Hz
	Setting range	0.00Hz~ max. frequency	
P8-20	Frequency detection hysteresis value (FDT1)	Factory value	50 per cent
	Setting range	0.0%~100.0% (FDT1 level)	

When the operating frequency is higher than the frequency detection value, the drive multi-function output DO outputs the ON signal, and when the frequency is lower than the detection value by a certain frequency value, the DO output ON signal is canceled.

The above parameters are used to set the detection value of the output frequency, and the hysteresis value of the output action release. Where P8-20 is the percentage of the hysteresis frequency relative to the frequency detection value P8-19. The figure shows the schematic diagram of the FDT function

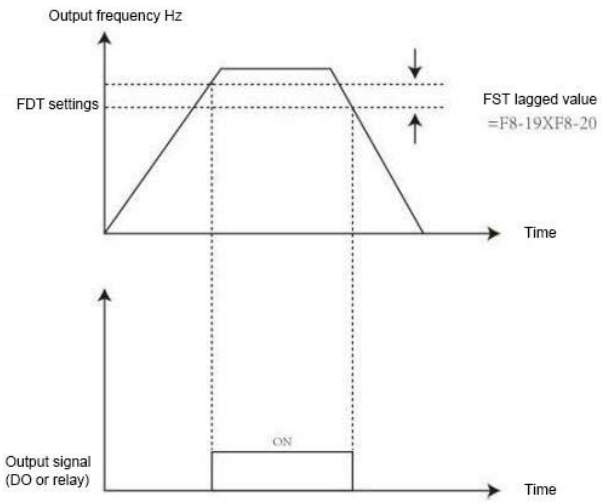

FDT Level Schematic

P8-21	Frequency Reach Detection Width	Factory value	0.0 per cent
	Setting range	0.00~100% (max. frequency)	

When the operating frequency of the driver is within a certain range of the target frequency, the driver's multi-function DO outputs the ON signal.

This parameter is used to set the detection range for frequency arrivals, which is a percentage relative to the maximum frequency.

The figure below illustrates the frequency arrivals:

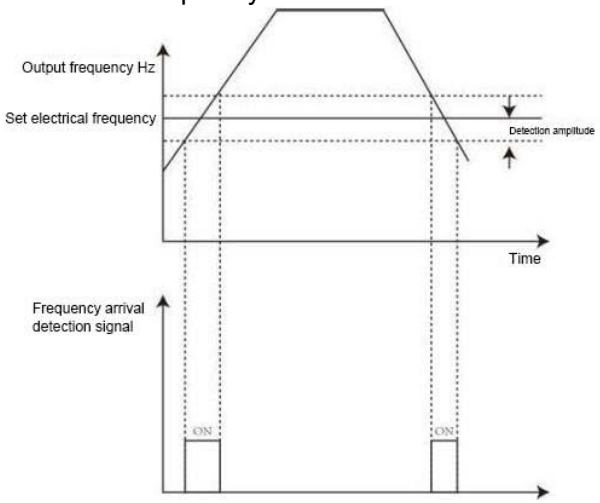

Schematic representation of frequency arrival detection of radiation

P8-22	Effectiveness of jump frequency during acceleration and deceleration	Factory value	0
	Setting range	0: Invalid	

This function code is used to set whether the jump frequency is valid during acceleration and deceleration.

When set to valid, the actual operating frequency jumps over the set jump frequency boundary when the operating frequency is in the jump frequency range. The following diagram shows the jump frequency effective during acceleration and deceleration.

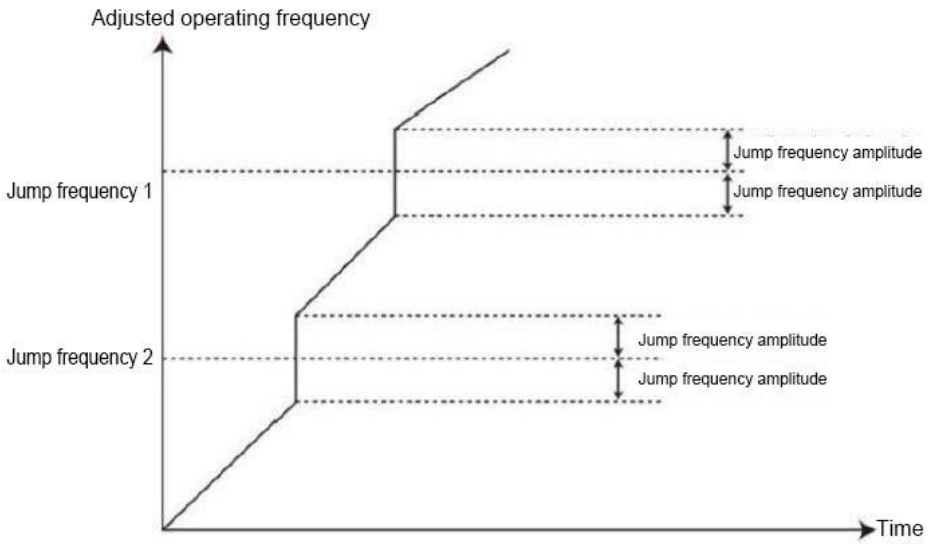

Effective diagram of jumping frequency during acceleration and deceleration

This function is effective when the motor selection is motor 1 and the acceleration and deceleration times are not switched via the DI digital input terminals. It is used to select different acceleration and deceleration times according to the operating frequency range during drive operation without using the DI digital input terminals.

P8-25	Acceleration time 1 and acceleration time 2 switching frequency point	Factory value	0.00Hz
	Setting range	0.00Hz~ max. frequency	
P8-26	Deceleration time 1 and deceleration time 2 switching frequency point	Factory value	0.00Hz
	Setting range	0.00Hz~ max. frequency	

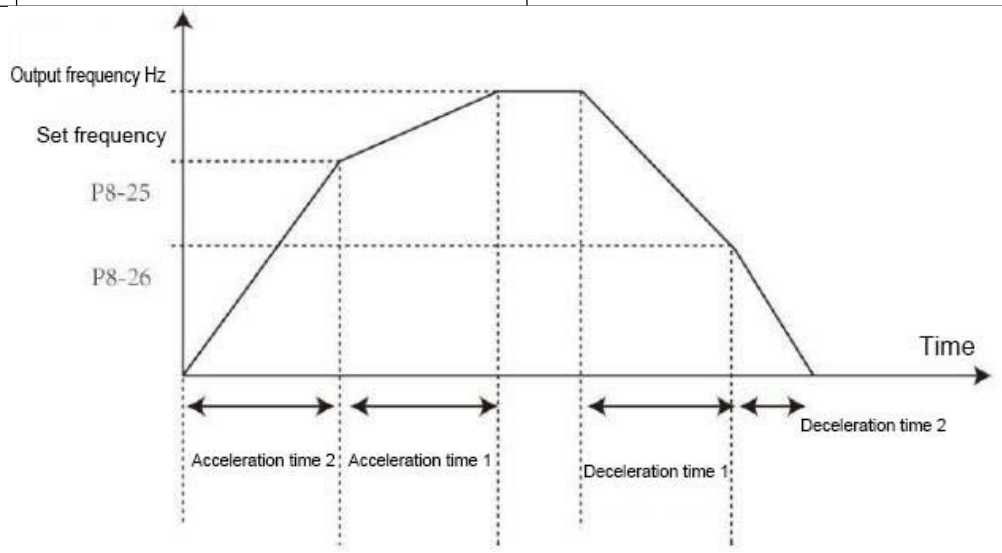

Acceleration and deceleration time switching diagram

The above figure shows the schematic diagram of acceleration and deceleration time switching. During acceleration, acceleration time 2 is selected if the operating frequency is less than P8-25, and acceleration time 1 is selected if the operating frequency is greater than P8-25.

During deceleration, deceleration time 1 is selected if the operating frequency is greater than P8-26, and deceleration time 2 is selected if the operating frequency is less than P8-26.

P8-27	Terminal Jog Priority	Factory value	0
	Setting range	0: Jog priority invalid 1: Jog priority is effective 2: Jog mode 2 selection	

This parameter is used to set whether the terminal jog function has the highest priority.

When terminal jog priority is active, the drive switches to terminal jog operation state if a terminal jog command occurs during operation.

Name	Setting range	Factory value	Variation
Terminal Jog Mode	0: Jog priority is invalid 1: Jog priority is valid 2: Jog mode 2 selection	0	☆

After the selection of jog mode 2, the jog priority is valid, and the inverter stops after the jog is released if the external terminal operation is valid; the jog stopping mode can be set to stop according to P6-10, and the free stopping mode is accepted.

P8-28	Frequency Detection Value (FDT2)	Factory value	50.00Hz
	Setting range	0.00Hz~ max. frequency	
P8-29	Frequency detection hysteresis value (FDT2)	Factory value	5.0
	Setting range	0.0%~100.0% (FDT2 level)	

This frequency detection function is exactly the same as the function of FDT1, please refer to the relevant description of FDT1, i.e. the description of function codes P8-19 and P8-20.

P8-30	Arbitrary arrival frequency detection value 1	Factory value	50.00Hz
	Setting range	0.00Hz ~ max. frequency	
P8-31	Arbitrary arrival frequency detection amplitude1	Factory value	0.0 per cent
	Setting range	0.0%~100.0% (max. frequency)	
P8-32	Arbitrary arrival frequency detection value 2	Factory value	50.00Hz
	Setting range	0.00Hz~ max. frequency	
P8-33	Arbitrary arrival frequency detection amplitude2	Factory value	0.0 per cent
	Setting range	0.0%~100.0% (max. frequency)	

When the output frequency of the driver is within the positive or negative detection range of the arbitrary arrival frequency detection value, the multi-function DO outputs the ON signal. Two sets of arbitrary arrival frequency detection parameters are provided to set the frequency value and frequency detection range respectively. The following figure shows the schematic diagram of this function.

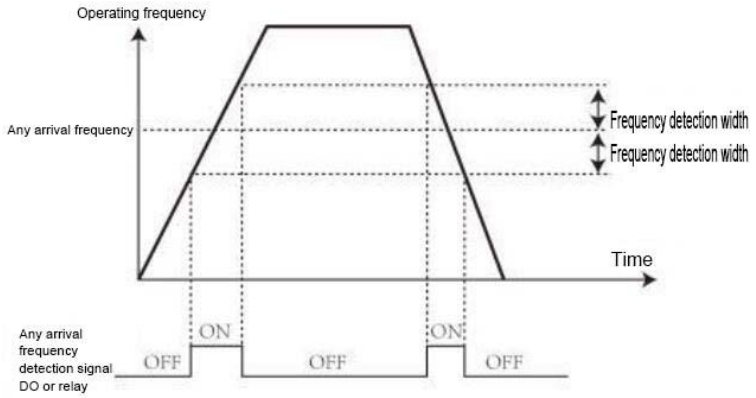

Arbitrary Arrival Frequency Schematic

P8-34	Zero current detection level	Factory value	5.0 per cent
	Setting range	0.0% ~300.0% (motor rated current)	
P8-35	Zero current detection delay time	Factory value	0.10s
	Setting range	0.00s~600.00s	

When the output current of the driver, is less than or equal to the zero current detection level, and the duration exceeds the zero current detection delay time, the driver

The actuator multi-function DO outputs an ON signal. The following figure shows the zero current detection schematic.

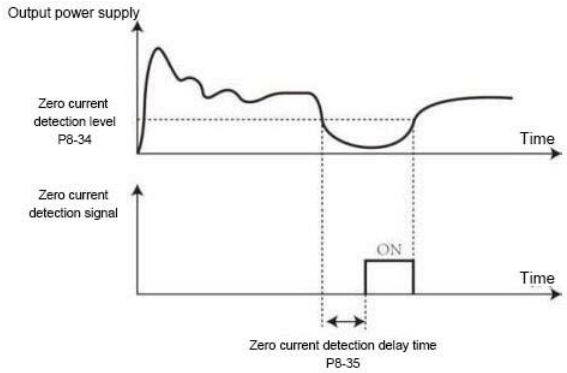

P8-36	Output current overrun	Factory value	200.0 per cent
	Setting range	0.0% (not detected) 0.1%~300.0% (motor rated current)	
P8-37	Output current overrun detection delay time	Factory value	0.00s
	Setting range	0.00s~600.00s	

When the output current of the driver is greater than or exceeds the limit detection point, and the duration exceeds the software overcurrent point detection delay time, the driver multi-function DO outputs the ON signal, and the following figure shows the schematic diagram of the output current over limit function.

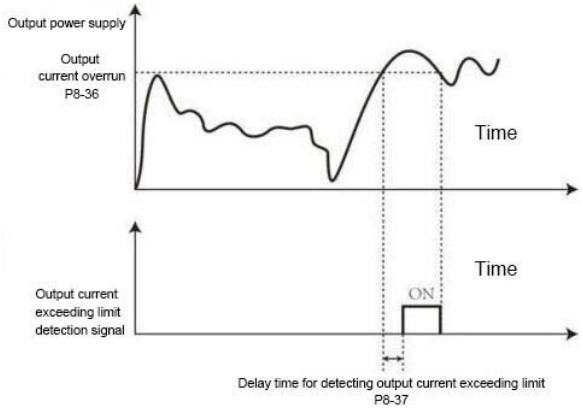

Output current overrun detection schematic

P8-38	Arbitrary arrival current 1	Factory value	100.0 per cent
	Setting range	0.0%~300.0% (motor rated current)	
P8-39	Arbitrary arrival current 1 width	Factory value	0.0 per cent
	Setting range	0.0%~300.0% (motor rated current)	
P8-40	Arbitrary arrival current 2	Factory value	100.0 per cent
	Setting range	0.0%~300.0% (motor rated current)	
P8-41	Arbitrary arrival current 2 width	Factory value	0.0 per cent
	Setting range	0.0%~300.0% (motor rated current)	

When the output current of the driver is within the positive or negative detection width of the set arbitrary arrival current, the driver's multi-function DO outputs the ON signal. Provide two sets of arbitrary arrival current and detection width parameters, the following figure shows the function schematic.

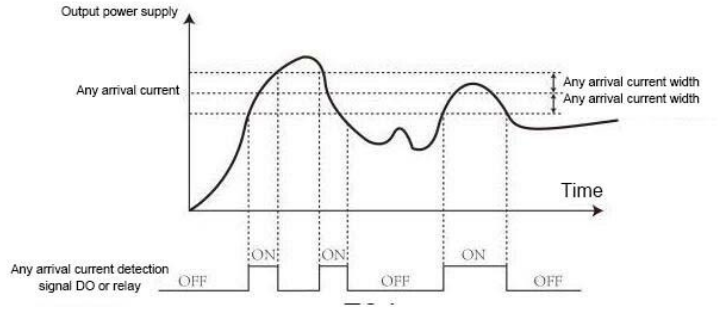

Arbitrary Arrival Frequency Detection Schematic

P8-42	Timer function selection		Factory value	0
	Setting range	0	Null	
		1	Efficiently	
P8-4	Timed runtime selection		Factory value	0
	Setting range	0	P8-44 Settings	
		1	AI1	
		2	AI2	
		3	AI3	
P8-44	Timed Runtime		Factory value	0.0Min
	Setting range		0.0Min~6500.0Min	

This group of parameters is used to complete the drive timer run function.

When P8-42 Timing Function Selection is valid, the timer starts when the drive is started, and when it reaches the set timed operation time, the drive

Automatic shutdown with simultaneous multi-function DO output ON signal.

The drive is timed from 0 each time it is started, and the timed remaining run time can be viewed via U0-20.

The timed run time is set by P8-43 and P8-44, and the time unit is minutes.

P8-45	AI1 Input voltage protection value lower limit	Factory value	3.10V
	Setting range	0.00V~P8-46	
P8-46	AI1 Input voltage protection value upper limit	Factory value	6.80V
	Setting range	P8-45 ~ 10.00V	

When the value of Analog input AI1 is greater than P8-46 or AI1 input is less than P8-45, the multi-function DO of the driver outputs the "AI1 input overrun" ON signal, which is used to indicate whether or not the input voltage of AI1 is within the set range.

P8-47	Module temperature reaches	Factory value	75°C
	Setting range	0.00V~P8-46	

When the temperature of the inverter heat sink reaches this temperature, the driver multi-function DO outputs the "module temperature reached" ON signal.

P8-48	Cooling Fan Control	Factory value	0
	Setting range	0: Fan running during operation	

It is used to select the action mode of the cooling fan, when selecting 0, the fan will run when the drive is running, if the temperature of the radiator is higher than 40 degrees in the shutdown state, the fan will run, and the fan will not run when the radiator is lower than 40 degrees in the shutdown state.

When selected as 1, the fan runs consistently on power-up.

P8-53	Arrival time for this run	Factory value	0.0Min
	Setting range	0.0Min~6500.0Min	

When the start-up runtime reaches this time, the drive's multi-function digital DO output "This runtime reached" is turned ON.

Signal.

Group P9 Fault and Protection

P9-00	Motor overload protection options		Factory value	1
	Setting range	0	Prohibited	
		1	Permissible	
P9-01	Motor overload protection gain		Factory value	01
	Setting range		0.20~10.00	

P9-00=0: no motor overload protection function, there may be a danger of motor overheating damage, it is recommended that the drive and motor between the

Heating relay;

P9-00=1: At this time, the driver judges whether the motor is overloaded or not according to the inverse time curve of motor overload protection.

The inverse time curve for motor overload protection is: 220% × (P9-01) × rated motor current for 1 minute for motor overload fault; 150% × (P9-01) × rated motor current for 60 minutes for motor overload fault.

Users need to set the value of P9-01 correctly according to the actual overload capacity of the motor. Setting this parameter too large may easily lead to overheating and damage of the motor without the danger of the drive alarming!

P9-02	Motor overload warning system	Factory value	80 per cent
	Setting range	50%~100%	

This function is used to give the control system a warning signal via the DO before the motor is protected against an overload fault. The warning coefficient is used to determine to what extent the warning is given before the motor is protected against overload. The higher the value, the lower the warning advance.

When the drive output current accumulation, greater than the overload inverse time curve and P9-02 product, the drive multi-function digital DO output

The "Motor overload alarm" ON signal is generated.

P9-03	Overvoltage stall gain	Factory value	30
	Setting range	0 (no overvoltage stall) ~ 100	
P9-04	Overvoltage stall protection voltage	Factory value	760
	Setting range	636 ~795 (three-phase)	

During deceleration of the drive, when the DC bus voltage exceeds the over-voltage stall protection voltage, the drive stops decelerating to keep at the current operating frequency, and continues to decelerate when the bus voltage drops.

Overvoltage stall gain is used to adjust the ability of the drive to suppress overvoltage during deceleration. The larger the value, the greater the overvoltage suppression. The smaller the gain setting, the better, provided that no overvoltage occurs.

For loads with small inertia, the overvoltage stall gain shall be small, otherwise it causes the system dynamic response to become slower. For large inertia loads, this value shall be large, otherwise the suppression effect is not good and overvoltage failure may occur.

When the overvoltage stall gain is set to 0, the overvoltage stall function is canceled.

The overvoltage stall protection voltage settings are as follows:

Voltage level	Overvoltage stall protection voltage value
Single-phase 220V	416V
Three-phase 220V	416V
Three-phase 380V	760V
Three-phase 480V	889V

P9-05	Overcurrent stall gain	Factory value	20
	Setting range	0~100	
P9-06	Overcurrent stall protection current	Factory value	150 per cent
	Setting range	100%~200%	

Overcurrent stall: When the output current of the drive reaches the set over current stall protection current (P9-06), the drive reduces the output frequency when accelerating; reduces the output frequency when running at constant speed; and slows down the descending speed when decelerating until the current is less than the over current stall protection current (P9-06), then the running frequency will return to normal.

Overcurrent stall protection current: Selects the current protection point for the overcurrent stall function. Above the value of this parameter the drive starts to execute the overcurrent stall protection function. The value is a percentage of the rated current relative to the motor. Overcurrent Stall Gain: Used to adjust the ability of the drive to suppress overcurrent during acceleration and deceleration. The larger the value, the greater the ability to suppress overcurrent.

The smaller this gain is set, the better, provided no overcurrent occurs.

For small inertia loads, the Overcurrent stallgain shall be small, otherwise it causes the system dynamic response to become slower. For loads with large inertia, this value shall be large, otherwise the suppression effect is not good and overcurrent faults may occur. In the case of very small inertia, it is recommended that the overcurrent suppression gain be set to less than 20, and when the overcurrent loss gain is set to 0, the overcurrent loss function is canceled.

P9-07	Selection of short-circuit protection to ground before power-up and operation		Factory value	11
	Setting range	Ones place	Power-on short circuit detection to ground 0: not valid 1: valid	
		Tens place	Short circuit to ground detection before operation 0: not valid 1: valid	

Optionally, the drive detects if the motor is shorted to ground before powering up or running.

If this function is active, a voltage will be output at the UVW terminal of the driver for a period of time after power-up or before operation.

P9-08	V/ F Weak Magnetic Region Doubling Current Limiting Factor	Factory value	200 per cent
	Setting range	50%~300%	

In the region of high times weak magnetism, the motor drive current is small, relative to the rated frequency below, the same stall current, the speed of the motor falls a lot, in order to improve the operating characteristics of the motor, you can reduce the stall action current above the rated frequency, in some centrifuges and so on, the operating frequency is high, the requirement of a few times weak magnetism and load inertia is large occasions, this method has a good effect on accelerating the performance.

Transition stall action current above rated frequency = (fs/fn)*k*LimitCur.

fs is the operating frequency, fn is the rated frequency of the motor, k is the P9-08 "V/F current limiting coefficient for the weak magnetic region", LimitCur is the P9-06 "over loss of speed action current";

P9-09	Failure auto reset times	Factory value	0
	Setting range	0~20	

Used to set the number of times a drive can be automatically reset when it selects Fault Auto Reset. After this number of times is exceeded, the drive remains in the fault state.

P9-10	Fault DO action selection during fault auto reset	Factory value	1
	Setting range	0: No action 1: Movement	

If the drive is set up with the Fault Auto Reset function, whether or not the Fault DO operates during the Fault Auto Reset can be set with P9-10.

P9-11	Fault auto reset interval	Factory value	1.0s
	Setting range	0.1s~100.0s	

Wait time between drive fault alarm, and automatic fault reset

P9-12	Input phase loss protection selection	Factory value	11
	Setting range	0: Prohibited 1: Permission	

Select whether the input is protected against phase loss or contactor suction.

Input phase loss protection is only available for models with a power of 30kW or more, and there is no input phase loss protection for power segments below that, regardless of whether P9-12 is set to 0 or 1.

P9-13	Output out-of-phase protection selection	Factory value	1
	Setting range	0: Prohibited 1: Permitted	

Select whether or not to protect the output from phase loss.

P9-14	Type of first failure	0~99
P9-15	Second failure type	

P9-16	Third (most recent) failure type	

Record the last three fault types for the drive, with 0 being no fault. For possible causes and solutions to each fault code.

Please refer to Chapter 8 for relevant instructions.

P9-17	Frequency at third failure	Frequency at last failure
P9-18	Current at third fault	Current at last fault
P9-19	Busbar voltage at third fault	Bus voltage at last fault
P9-20	Input terminal status at third fault	The state of the digital input terminals at the time of the most recent fault, in that order: BIT9 BIT8 BIT7 BIT6 BIT5 BIT4 BIT3 BIT2 BIT1 BIT0 DI0 DI9 DI8 DI7 DI6 DI5 DI4 DI3 DI2 DI1 When the input terminal is ON its corresponding secondary bit is 1, OFF is 0, the status of all DIs is converted to decimal number display.
P9-21	Output terminals on third fault	The status of all output terminals at the time of the most recent fault , in the order of BIT4 BIT3 BIT2 BIT1 BIT0 DO2 DO1 REL2 REL1 FMP When the input terminal is ON, the corresponding secondary bit is 1, and OFF is 0, and the status of all DIs is converted to a decimal number for display.
P9-22	Drive status at third failure	Reservation
P9-23	Power-up time on third failure	Current power-up time at the time of the most recent failure
P9-24	Running time at third failure	Current running time at the time of the most recent failure
P9-27	Frequency at second failure	
P9-28	Current at second fault	
P9-29	Busbar voltage at second fault	
P9-30	Input terminal status at second fault	
P9-31	Output terminals at second fault	

P9-32	Drive status at second failure			
P9-33	Power-up time at second failure			
P9-34	Runtime at second failure			
P9-37	Frequency at first failure		Same as P9-17~P9-24	
P9-38	Current at first fault			
P9-39	Busbar voltage at first fault			
P9-40	Input terminal status at first fault			
P9-41	Output terminals at first fault			
P9-42	Drive status at first failure			
P9-43	Power-up time at first failure			
P9-44	Running time at first failure			
P9-47	Fail-safe action selection 1		Factory value	00000
	Setting range	Ones place	Motor overload (Err 11)	
		0	Freedom to stop	
		1	Shutdown by stopping mode	
		2	Continue to run	
		Tens place	Input phase loss (Err 12) (same bit)	
		Hundreds place	Output phase loss (Err 13) (same bit)	
		Thousands place	External fault (Err 15) (same bit)	
		Ten thousands place	Communication error (Err 16) (same bit)	
P9-48	Fail-safe action selection 2		Factory value	00 00 0
	Setting range	Ones place	Encoder fault (Err 20)	
		0	Freedom to stop	
		1	Switch to V/F to stop the machine in the stop mode.	
		2	Switch to V/F and continue to run	

		Tens place	Function code read/write exception (Err 21)
		0	Freedom to stop
		1	Shutdown by stopping mode
		Hundreds place	Reservation
		Thousands place	Motor overheating (Err 25) (same as F9-47 positions)
		Ten thousands place	Runtime arrival (Err 26) (same as F9-47 bits)
P9-49	Fail-safe action selection 3		2
	Setting range	Ones place	Tens place
		Tens place	0B
		Hundreds place	1
		Thousands place	Hundreds place
		0	Freedom to stop
		1	Shutdown by stopping mode
		2	Decelerate to 7% of the motor's rated frequency and continue to run, without dropping the load it will automatically return to the set frequency.
		Ten thousands place	Loss of PID feedback at runtime (Err 31) (same as the ones place of P9-47)
P9-50	Fail-safe action selection 4		Factory value: 00000
	Setting range	Ones place	Excessive speed deviation (Err 42) (same as the ones place of P9-47)
		Tens place	Motor overspeed (Err 43) (same as the ones place of P9-47)
		Hundreds place	Initial position error (Err 51) (same as the ones place of P9-47)
		Thousands place	Speed feedback error (Err 52) (same as the ones place of P9-47)
		Ten thousands place	Reservation

When "Free Stop" is selected, the drive displays Err** and simply stops.

When "Stop by stopping" is selected, the drive displays A** and stops by stopping, and Err** is displayed after stopping. When "Continue to run" is selected, the drive continues to run and A** is displayed, and the operating frequency is set by P9-54.

P9-54	Frequency selection for continued operation in case of failure		Factory value	0
	Setting range	0	Running at current operating frequency	
		1	Runs at set frequency	
		2	Upper frequency operation	
		3	Operate at lower frequency limit	
		4	Operate at abnormal standby frequency	
P9-55	Abnormal Standby Frequency		Factory value	100.0 per cent
	Setting range		60.0%~100.0%	

When a fault is generated during drive operation and the handling of that fault is set to continue operation, the drive displays A** and operates at the frequency determined by P9-54.

When Abnormal Standby Frequency operation is selected, the value set by P9-55, is a percentage relative to the maximum frequency.

P9-56	Motor Temperature Sensor Type		Factory value	0
	Setting range	0	No temperature sensor	
		1	PT100	
		2	PT1000	
P9-57	Motor overheating protection threshold		Factory value	110°C
	Setting range		0°C~200°C	
P9-58	Motor overheating pre-alarm threshold		Factory value	90°C
	Setting range		0°C~200°C	

The temperature signal of the motor temperature sensor needs to be connected to the multi-function input/output expansion card, which is optional. The Analog input AI3 of the expansion card can be used as motor temperature sensor input, and the motor temperature sensor signal is connected to AI3 and PGND.

AI3 Analog input supports both PT100 and PT1000 motor temperature sensors, the sensor type must be set correctly when used. The motor temperature value is displayed in U0-34.

When the motor temperature exceeds the motor overheating protection threshold P9-57, the drive fails to alarm and is handled according to the selected fault protection action mode.

When the motor temperature exceeds the motor overheat pre-warning threshold P9-58, the drive multi-function digital DO outputs the motor overheat pre-warning ON signal.

P9-59	Momentary stop action selection		Factory value	0
	Setting range	0	No temperature sensor	
		1	PT100	

		2	PT1000	
P9-60	Instantaneous stop action pause judgement voltage		Factory value	85 per cent
	Setting range		0.0% ~100.0%	
P9-61	Instantaneous outage voltage recovery judgement time		Factory value	0.50s
	Setting range		0.00s~100.00s	
P9-62	Instantaneous blackout action judgement voltage		Factory value	80.0 per cent
	Setting range		60.0%~100.0% (standard bus voltage)	

This function means that in the event of a momentary power failure or sudden voltage drop, the drive compensates for the drop in drive DC bus voltage by reducing the output speed and feeding energy back to the load to maintain continued operation of the drive.

If P9-59= 1, the drive decelerates during an instantaneous power failure or sudden voltage drop, and accelerates normally to the set frequency operation when the bus voltage returns to normal. The basis for judging that the bus voltage returns to normal is that the bus voltage is normal and lasts longer than the time set by P9-61. If P9-59=2, the drive decelerates until it stops when there is an instantaneous power failure or a sudden drop in voltage.

P9-63	Load shedding protection options		Factory value	0
	Setting range	0	Null	
		1	Efficiently	
P9-64	Dropout detection level		Factory value	10.0 per cent
	Setting range		0.0%~100.0% (motor rated current)	
P9-65	Load Drop Detection Time		Factory value	1.0s
	Setting range		0.0s~60.0s	

If the load shedding protection function is active, the drive output frequency is automatically reduced to 7% of the rated frequency when the drive output current is less than the load shedding detection level P9-64 and the duration is greater than the load shedding detection time P9-65. If the load is restored during the dropout protection period, the drive automatically resumes operation at the set frequency.

P9-67	Over speed detection value	Factory value	15.0 per cent
	Setting range	0.0%~50.0% (max. frequency)	
P9-68	Over-speed detection time	Factory value	1.0s
	Setting range	0.0s~60.0s	

This function is only valid when the drive is running with speed sensor vector control.

When the drive detects that the actual rotational speed of the motor exceeds the maximum frequency, the exceeding value is greater than the overspeed detection value P9-67, and the duration is greater than the overspeed detection time P9-68, the drive fault alarm Err43, and is processed according to the fault protection action mode.

When the overspeed detection time is 0.0s, the overspeed fault detection is canceled.

P9-69	Excessive speed deviation detection value	Factory value	20.0 per cent
	Setting range	0.0%~50.0% (max. frequency)	
P9-70	Excessive speed deviation detection time	Factory value	5.0s
	Setting range	0.0s~60.0s	

This function is only valid when the drive is running with speed sensor vector control.

When the drive detects a deviation between the actual rotational speed of the motor and the set frequency, and the amount of deviation is greater than the excessive speed deviation detection value P9-69, and the duration is greater than the excessive speed deviation detection time P9-70, the drive fault alarms Err42 , and it is handled according to the fault protection action mode.

When the excessive speed deviation detection time is 0.0s, the excessive speed deviation fault detection is canceled.

P9-74	V/F overvoltage suppression rise frequency	Factory value	5Hz
	Setting range	5Hz~50Hz	

This parameter affects the over-voltage suppression function at constant speed, if this parameter is set too small, it is easy to occur over-voltage at constant speed, it is recommended to adjust it within 5~20Hz.

P9-75	Initial position fault enable (synchronous motor)	Factory value	11
	Setting range	Single digit: initial position fault 0: Closed 1: Enabling Tenth position: angular tuning fault with loaded zero position 0: Closed 1: Enabling	
P9-78	Initial position recognition initial pulse width time (synchronous motors)	Factory value	20
	Setting range	5~2000	

These two parameters affect the initial value of the initial position recognition of the synchronous motor and whether it is successful or not.

Group PA Process control PID function

PID control is a common method of process control, through the controlled amount of feedback signal and the difference between the target signal for proportional, integral, differential operations, by adjusting the output frequency of the drive, constitute a closed-loop system, so that the controlled amount of stability in the target value.

Applicable to flow control, pressure control and temperature control and other process control occasions, the following figure for the process PID control principle block diagram.

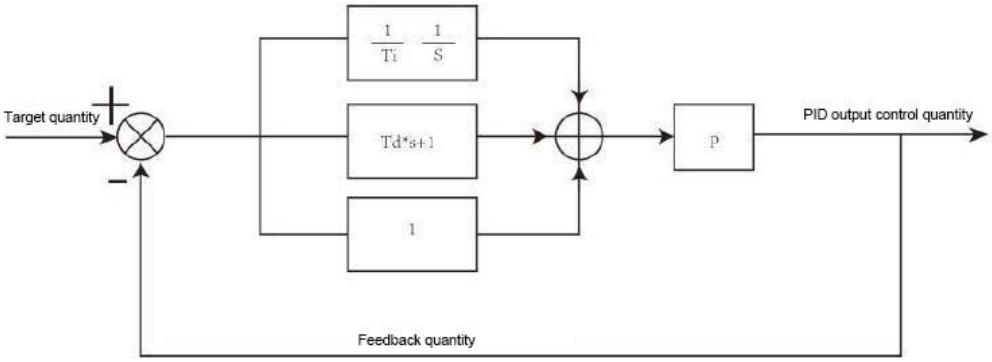

Process PID Block Diagram

PA-00	PID given source		Factory value	0
	Setting range	0	PA-01 Setting	
		1	AI1	
		2	AI2	
		3	AI3	
		4	PULSE pulse (DI5)	
		5	Communication	
		6	Multi-segment command (computing)	
		7	Up/Down or digital setting	
PA-01	PID value given		Factory value	50.0 per cent
	Setting range		0.0%~100.0%	

This parameter is used to select the channel where the target amount of the process PID is given.

The target quantity of the process PID is a relative value with a setting range of 0.0% to 100.0%. Similarly, the feedback quantity of PID is also a relative quantity, and the function of PID is to make these two relative quantities the same.

PA-02	PID Feedback Source		Factory value	0
	Setting range	0	AI1	

		1	AI2
		2	AI3
		3	AI1-AI2
		4	PULSE pulse (DI5)
		5	Communication
		6	AI1+AI2
		7	MAX (|AI1|, |AI2|)
		8	MIN (|AI1|, |AI2|)

This parameter is used to select the feedback signal channel for the process PID.

The feedback amount of the process PID is also a relative value with a setting range of 0.0% to 100.0%.

PA-03	Direction of PID action		Factory value	0
	Setting range	0	Positive effect	
		1	Opposite reaction	

Positive effect: When the feedback signal of PID is smaller than the given amount, the output frequency of the drive rises. Such as winding tension control occasions.

Reaction: When the feedback signal of PID is smaller than the given amount, the output frequency of the drive decreases. Such as unwinding tension control occasions.

This function is affected by the reversal of the direction of action of the multifunction terminal PID (function 35).

PA-04	PID feedback range	Factory value	1000
	Setting range	0~65535	

The PID give feedback range is dimensionless units for the PID give display U0-15 and the PID feedback display U0-16.

The relative value of the PID give feedback, 100.0%, corresponds to the give feedback range PA-04. For example, if PA-04 is set to 2000, then when the PID is given 100.0%, the PID feedback display U0-15 will be 2000.

PA-05	Proportional gain Kp 1	Factory value	20.0
	Setting range	0.0~100.0	
PA-06	Integration time Ti 1	Factory value	2.00s
	Setting range	0.01s~10.00s	
PA-07	Differential time Td 1	Factory value	0.000s
	Setting range	0.00~10.000	

Proportional gain Kp1:

It determines the regulation intensity of the whole PID regulator, and the larger Kp1 is, the larger the regulation intensity is. The parameter 100.0 indicates that when the deviation between the PID feedback quantity and the given quantity is 100.0%, the PID regulator will adjust the output frequency command to the maximum frequency.

Integral time Ti1:

Determines the strength of integral regulation of the PID regulator. The shorter the integration time, the stronger the regulation. Integral time means that when the deviation between the PID feedback amount and the given amount is 100.0%, the integral regulator is continuously adjusted for that time, and the adjustment amount reaches the maximum frequency.

Differential time Td1:

Determines how strongly the PID regulator regulates the rate of change of deviation. The longer the differentiation time, the stronger the adjustment. The differentiation time is the time when the feedback quantity changes by 100.0%, and the adjustment amount of the differential regulator is the maximum frequency.

PA-08	PID inversion cut-off frequency	Factory value	0.00Hz
	Setting range	0.00~ Maximum Frequency	

In some cases, only when the PID output frequency is negative (i.e., the drive is reversed), it is possible for the PID to control the feed and feedback quantities to the same state, but too high a reversal frequency is not permitted in some cases, and the PA-08 is used to determine the upper limit of the reversal frequency.

PA-09	PID Deviation Limit	Factory value	0.01 per cent
	Setting range	0.0%~100.0%	

When the deviation between the PID given amount and the feedback amount is less than PA-09, the PID stops regulating action. In this way, the deviation between the given and the feedback is small and the output frequency is stable and unchanged, which is very effective for some closed-loop control occasions.

PA-10	PID differential limiting	Factory value	0.10%
	Setting range	0.00 per cent ~100.00 per cent	

PID regulator, the role of differential is more sensitive, it is easy to cause system oscillation, for this reason, generally limit the role of PID differential to a smaller range, PA-10 is used to set the range of PID differential output.

PA-11	PID given change time	Factory value	0.00s
	Setting range	0.00s~650.00s	

PID given change time, the time it takes for the PID given value to change from 0.0% to 100.0%.

When the PID setting changes, the PID setting value changes linearly according to the time of the setting change, which reduces the negative impact on the system caused by the sudden change of the setting.

PA-12	PID feedback filtering time	Factory value	0.00s
	Setting range	0.00s~60.00s	
PA-13	PID output filter time	Factory value	0.00s
	Setting range	0.00s~60.00s	

PA-12 is used to filter the PID feedback quantity, which is beneficial to reduce the influence of the feedback quantity being disturbed, but will bring about the response performance degradation of the process closed-loop system.

PA-13 is used to filter the PID output frequency, which attenuates the abrupt change in the driver output frequency, but also brings about a degradation in the response performance of the process closed-loop system.

PA-15	Proportional gain Kp2		Factory value	20.0
	Setting range		0.0~100.0	
PA-16	Integration time Ti2		Factory value	2.00s
	Setting range		0.01s~10.00s	
PA-17	Differential time Td2		Factory value	0.000s
	Setting range		0.00~10.000	
PA-18	PID parameter switching conditions		Factory value	0
	Setting range	0	No switch	
		1	Switching via DI terminal	
		2	Automatic switching according to deviation	
PA-19	PID parameter switching deviation 1		Factory value	20.0 per cent
	Setting range		0.0%~PA-20	
PA-20	PID parameter switching deviation 2		Factory value	80.0 per cent
	Setting range		PA-19~100.0 per cent	

In some applications, one set of PID parameters cannot satisfy the needs of the whole operation process, and different PID parameters are required for different situations. This group of function codes is used to switch between two groups of PID parameters. The regulator parameters PA- 15~PA- 17 are set in a way similar to the parameters PA-05~PA-07.

The two sets of PID parameters can be switched via the multifunctional digital DI terminal or automatically switched according to the deviation of the PID.

When the selection is Multi-function DI terminal switching, the Multi-function terminal function selection shall be set to 43 (PID parameter switching terminal), and parameter group 1 (PA-05~PA-07) shall be selected when this terminal is invalid, and parameter group 2 (PA-15~PA- 17) shall be selected when the terminal is valid.

When automatic switching is selected, the absolute value of the deviation between feed and feedback is less than the PID parameter switching deviation 1 PA-19, the PID parameter selection selects parameter group 1. If the absolute value of the deviation between feed and feedback is greater than the PID switching deviation 2 PA-20, select parameter group 2 for PID parameter selection. When the deviation between the given and feedback is between switching deviation 1 and switching deviation 2, the PID parameter is the linear interpolation value of the two groups of PID parameters, as shown in the figure below.

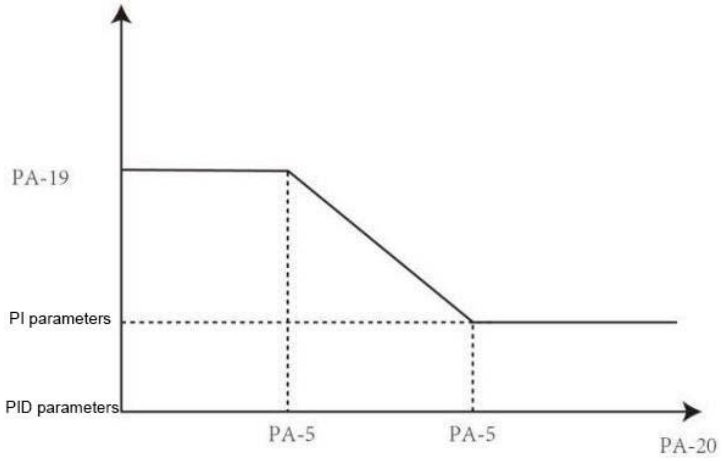

PID parameter switching

PA-21	PID initial value	Factory value	0.0 per cent
	Setting range	0.0%~100.0%	
PA-22	PID initial value holding time	Factory value	0.00s
	Setting range	0.00s~650.00s	

When the drive starts, the PID output is fixed to the PID initial value PA-21, and the PID starts closed-loop regulation operation only after the continuous PID initial value holding time PA-22. The following diagram shows the function of the PID initial value.

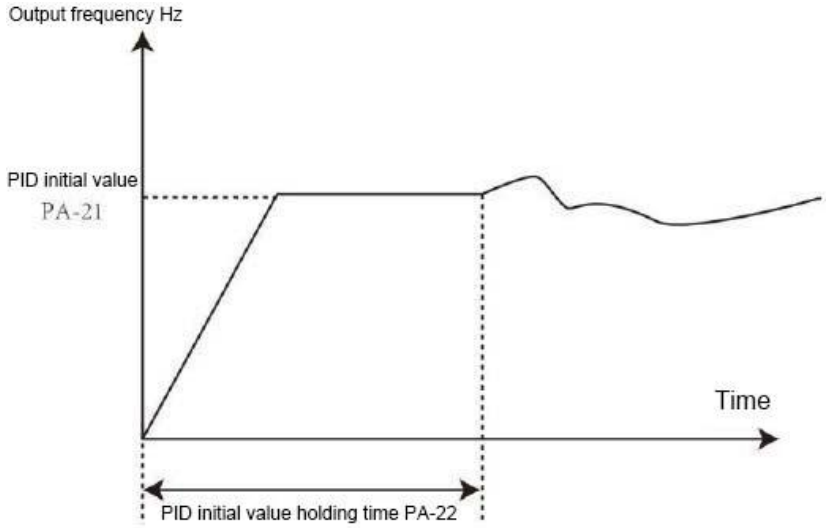

Schematic diagram of initial value of PID function

PA-23	Positive maximum of two output deviations	Factory value	1.00 per cent
	Setting range	0.00%~100.0%	
PA-24	Two output deviation inverse max.	Factory value	1.00 per cent
	Setting range	0.00%~100.0%	

This function is used to limit the difference between two beats (2ms/beat) of the PID output in order to inhibit the PID output from changing too quickly and to stabilize drive operation.

PA-23 and PA-24 correspond to the maximum value of the absolute value of the output deviation in forward and reverse directions, respectively.

PA-25	PID Integral Properties		Factory value	00
	Setting range	Ones place	Integral separation (math.)	
		0	Null	
		1	Efficiently	
		Tens place	Whether to stop integrating when the output reaches the limit value	
		0	Keep the points coming.	
		1	Stop Points	

Separation of points:

If the integral separation is set to be effective, the integral PID integral of the PID stops operating when the multi-function digital S integral pause (function 22) is effective, and then the PID is effective only for proportional and differential action.

With Integral Separation selected as Invalid, Integral Separation is invalid regardless of whether the multifunction digit S is valid.

Whether or not to stop the integration after the output reaches the limit value:

After the PID operation output reaches the maximum or minimum value, you can select whether or not to stop the integral action. If selected to stop the integration, the PID integration stops calculating at this point, which may help to reduce the amount of PID overshoot.

PA-26	PID feedback loss detection value	Factory value	0.0 per cent
	Setting range	0.0%: No judgement on feedback loss	
PA-27	PID feedback loss detection time	Factory value	1.0s
	Setting range	0.0s~20.0s	

This function code is used to determine if PID feedback is lost.

When the amount of PID feedback is less than the feedback loss detection value PA-26 , and the duration exceeds the PID feedback loss detection time PA-27 , the drive alarms the fault Err31 and handles it according to the selected fault handling method.

PA-28	PID stopping operation	Factory value	0

	Setting range	0	Idle without computing
		1	Shutdown computing

Used to select whether the PID continues to operate in a PID shutdown state. In general applications, the PID shall stop calculating in the shutdown state. However, PA-28 shall be set to 1 for sleep and wake-up functions.

PA-29	PID Sampling Time	Factory value	1
	Setting range	0~10	
PA-30	PID feed-forward compensation gain	Factory value	0
	Setting range	0~5000	
PA-31	PID feed-forward compensation lower limit frequency	Factory value	5.00HZ
	Setting range	0.00Hz~P0-10 (max. frequency)	

These parameters affect the speed of the PID response.

PA-32	PID power-up delay disconnection detection time	Factory value	8.0s
	Setting range	0.0s~200.0s	
PA-33	Frequency of stop holding brake operation	Factory value	1.50Hz
	Setting range	0~5000	
PA-34	Holding brake action delay time	Factory value	5.0s
	Setting range	0.0s~200.0s	

These parameters are used on the wire drawing machine to set the relay 1 output signal to 44, in conjunction with the host application.

Group Pb Swing frequency, fixed length and counting

The oscillating frequency function is suitable for textile and chemical fibre industries, as well as for occasions where traverse and winding functions are required.

Swing frequency function refers to the output frequency of the drive to set the frequency as the centre of the up and down swing, the operating frequency in the time axis of the trajectory shown in the figure below, which swing amplitude set by the Pb-00 and Pb-01, when Pb-01 is set to 0 pendulum amplitude of 0, at this time the swing frequency does not work.

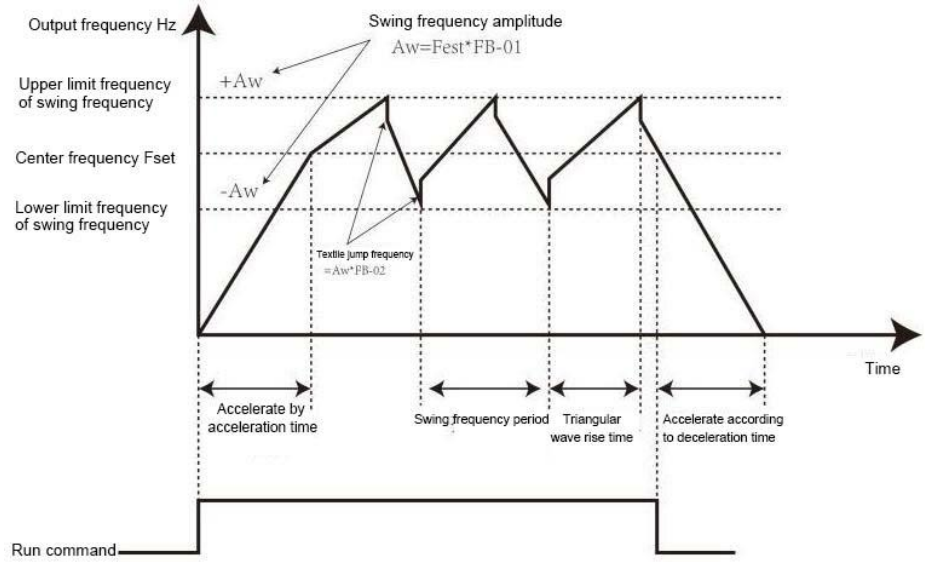

Oscillating Frequency Working Diagram

Pb-00	Oscillation setting method		Factory value	0
	Setting range	0	Relative to centre frequency	
		1	Relative to maximum frequency	

This parameter is used to determine the reference amount of the pendulum.

0: Relative to the centre frequency (P0-07 Frequency source), a variable pendulum system. The amplitude of the pendulum varies with the centre frequency (set frequency).

1: Relative maximum frequency (P0-10), for a fixed amplitude system with a fixed swing.

Pb-01	Swing amplitude	Factory value	0.0 per cent
	Setting range	0.0%~100.0%	
Pb-02	Burst frequency amplitude	Factory value	0.0 per cent
	Setting range	0.0%~50.0%	

This parameter is used to determine the value of the pendulum amplitude and the value of the glitch frequency.

When setting the pendulum amplitude relative to the centre frequency (Pb-00=0), the pendulum amplitude AW = frequency source P0-07 × pendulum amplitude Pb-01 . When setting the pendulum amplitude relative to the maximum frequency (Pb-00=1), the pendulum amplitude AW = maximum frequency P0-10 × pendulum amplitude Pb-01.

The glitch frequency amplitude is the frequency percentage of the glitch frequency relative to the pendulum amplitude when the swing frequency is running, i.e.: glitch frequency = pendulum amplitude AW x glitch frequency amplitude Pb-02 . If you select the pendulum amplitude relative to the centre frequency (Pb-00=0), the glitch frequency is the change value. If you select the pendulum amplitude relative to the maximum frequency (Pb-00=1), the glitch frequency is a fixed value.

Swing frequency operating frequency, subject to upper and lower frequency limits.

Pb-03	Oscillation period	Factory value	10.0s
	Setting range	0.0s~3000.0s	
Pb-04	Triangular wave rise time coefficient	Factory value	50.0 per cent
	Setting range	0.0%~100.0%	

Pendulum Frequency Period: The time value of a complete swing frequency period.

The delta wave rise time coefficient, Pb-04, is the percentage of delta wave rise time relative to the pendulum period, Pb-03. Triangle rise time = Pendulum period Pb-03 × Triangle rise time coefficient Pb-04 in seconds. The delta wave fall time = Pendulum period Pb-03 × (1 - delta wave rise time factor Pb-04) in seconds.

Pb-05	Setting length	Factory value	1000m
	Setting range	0m~65535m	
Pb-06	Actual length	Factory value	0m
	Setting range	0m~65535m	
Pb-07	Pulses per metre	Factory value	100 .0
	Setting range	0.1~6553.5	

The above function codes are used for fixed length control.

The length information shall be collected through the multifunctional digital input terminal, the number of pulses sampled by the terminal and the number of pulses per metre Pb-07 can be divided to calculate the actual length Pb-06. when the actual length is greater than the set length Pb-05, the multifunctional digital S outputs the "Length Arrived" ON signal.

During the fixed length control process, length reset operation can be performed through the multi-function DI digital input terminal (DI digital input terminal function selection is 28), please refer to P4-00~P4-09 for details.

The application requires that the corresponding input terminal function is set to "length counting input" (function 27) and that the DI5 port must be used for high pulse frequencies.

Pb-08	Setting the count value	Factory value	1000
	Setting range	1~65535	
Pb-09	Specify count value	Factory value	1000
	Setting range	1~65535	

The counting values have to be collected via the multifunction digital input terminals. The application requires that the function of the corresponding input terminal is set to "Counter input" (function 25) and that the DI5 port must be used for high pulse frequencies.

When the count value reaches the set count value Pb-08, the multifunction digital DO outputs the "set count value reached" ON signal, and then the counter stops counting. When the count value reaches the specified count value Pb-09, the multifunction digital DO outputs the "specified count value reached" ON signal, and the counter continues to count until the "set count value" is reached.

The specified count value Pb-09 shall not be greater than the set count value Pb-08. Figure 6-29 illustrates the set count value arrival and specified count value arrival functions.

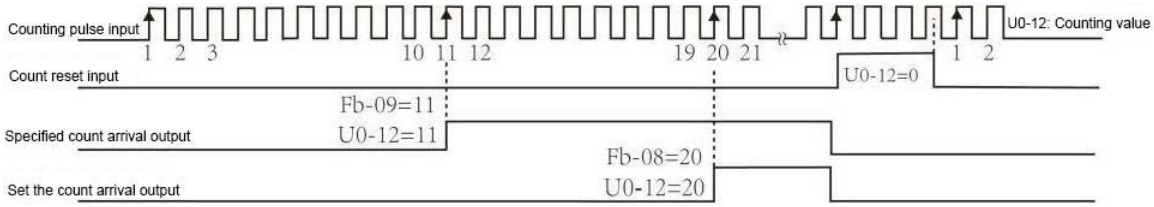

Schematic diagram of set count value setting and specified count value setting

PC Group Multi-segment commands and simple PLC functions

Multi-segment commands, which have a richer utility than the usual multi-segment speeds, can be used as a voltage source for V/F separation and as a source for process PID feeds, in addition to realizing multi-segment speed functions. For this reason, the magnitude of the multi-segment instruction is relative. Simple PLCs can only operate a combination of multi-segment commands.

PC-00	Multi-segment instruction 0	Factory value	0.0 per cent
	Setting range	-100.0 per cent ~100.0 per cent	
PC-01	Multi-segment instruction 1	Factory value	0.0 per cent
	Setting range	-100.0 per cent ~100.0 per cent	
PC-02	Multi-segment instruction 2	Factory value	0.0 per cent
	Setting range	-100.0 per cent ~100.0 per cent	
PC-03	Multi-segment instruction 3	Factory value	0.0 per cent
	Setting range	-100.0 per cent ~100.0 per cent	
PC-04	Multi-segment instruction 4	Factory value	0.0 per cent
	Setting range	-100.0 per cent ~100.0 per cent	
PC-05	Multi-segment instruction 5	Factory value	0.0 per cent
	Setting range	-100.0 per cent ~100.0 per cent	
PC-06	Multi-segment instruction 6	Factory value	0.0 per cent
	Setting range	-100.0 per cent ~100.0 per cent	
PC-07	Multi-segment instruction 7	Factory value	0.0 per cent
	Setting range	-100.0 per cent ~100.0 per cent	
PC-08	Multi-segment instruction 8	Factory value	0.0 per cent
	Setting range	-100.0 per cent ~100.0 per cent	
PC-09	Multi-segment instruction 9	Factory value	0.0 per cent
	Setting range	-100.0 per cent ~100.0 per cent	
PC-10	Multi-segment instruction 10	Factory value	0.0 per cent
	Setting range	-100.0 per cent ~100.0 per cent	
PC-11	Multi-segment instruction 11	Factory value	0.0 per cent
	Setting range	-100.0 per cent ~100.0 per cent	

PC-12	Multi-segment instruction 12	Factory value	0.0 per cent
	Setting range	-100.0 per cent ~100.0 per cent	
PC-13	Multi-segment instruction 13	Factory value	0.0 per cent
	Setting range	-100.0 per cent ~100.0 per cent	
PC-14	Multi-segment instruction 14	Factory value	0.0 per cent
	Setting range	-100.0 per cent ~100.0 per cent	
PC-15	Multi-segment instruction 15	Factory value	0.0 per cent
	Setting range	-100.0 per cent ~100.0 per cent	

Multi-segment commands can be used in three ways: as a frequency source, as a voltage source for V/F separation, and as a setting source for a process PID.

In the three applications, the outline of the multi-segment instruction is a relative value, ranging from -100.0% to 100.0%, which is a percentage of the relative maximum frequency when used as a frequency source, and a percentage of the relative rated voltage of the motor when used as a voltage source for V/F separation; and since the PID setting is originally a relative value, the multi-segment instruction does not require an outline conversion when used as a PID setting source.

Multi-segment commands need to be switched and selected according to the different states of the multi-function DI digital input terminals, please refer to the relevant instructions in group P4.

PC-16	Simple PLC operation method		Factory value	0
	Setting range	0	Single run end stop	
		1	End of single run holds final value	
		2	Keep going round and round	

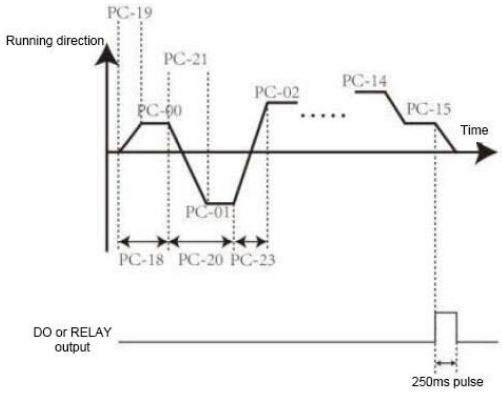

When used as a frequency source, the PLC has three modes of operation, which it does not have when used as a V/F separated voltage source. Among them:

0: Single run end stop The drive automatically stops after completing a single cycle and needs to be given the run command again to start.

1: End of Single Run Maintains Final Value After the drive completes a single cycle, it automatically maintains the frequency and direction of the last segment of operation.

2: Always Cycle After the drive completes a cycle, it automatically starts the next cycle until it stops on a stop command.

PC-17	Simple PLC power-down memory selection		Factory value	00
	Setting range	Ones place	Power-down memory option	
		0	No memory for power-down	
		1	Power-down memory	
		Tens place	Shutdown Memory Selection	
		0	Have no memory of downtime	
		1	Blackout memory	

PLC power-down memory means to remember the PLC operation phase and operation frequency before power-down, and continue operation from the memory phase on the next power-up. Selecting no memory restarts the PLC process each time power is applied.

PLC Shutdown Memory is a memory that records the previous PLC phase and frequency of operation at shutdown, and then continues from the memorized phase at the next run. Selecting No Memory restarts the PLC process each time it is started.

PC-18	Simple PLC segment 0 runtime	Factory value	0.0s (h)
	Setting range	0.0s (h) ~6553.5s (h)	
PC-19	Simple PLC 0th Acceleration and Deceleration Time	Factory value	0
	Setting range	0~3	
PC-20	Simple PLC 1st runtime	Factory value	0.0s (h)
	Setting range	0.0s (h) ~6553.5s (h)	
PC-21	Simple PLC 1st acceleration/deceleration time	Factory value	0
	Setting range	0~3	
PC-22	Simple PLC 2nd runtime	Factory value	0.0s (h)
	Setting range	0.0s (h) ~6553.5s (h)	
PC-23	Simple PLC 2nd acceleration/deceleration time	Factory value	0
	Setting range	0~3	
PC-24	Simple PLC segment 3rd runtime	Factory value	0.0s (h)
	Setting range	0.0s (h) ~6553.5s (h)	

PC-25	Simple PLC 3rd acceleration/deceleration time	Factory value	0
	Setting range	0~3	
PC-26	Simple PLC segment 4th runtime	Factory value	0.0s (h)
	Setting range	0.0s (h) ~6553.5s (h)	
PC-27	Simple PLC 4th acceleration/deceleration time	Factory value	0
	Setting range	0~3	
PC-28	Simple PLC segment 5th runtime	Factory value	0.0s (h)
	Setting range	0.0s (h) ~6553.5s (h)	
PC-29	Simple PLC 5th Acceleration and Deceleration Time	Factory value	0
	Setting range	0~3	
PC-30	Simple PLC segment 6th runtime	Factory value	0.0s (h)
	Setting range	0.0s (h) ~6553.5s (h)	
PC-31	Simple PLC 6th Acceleration and Deceleration Time	Factory value	0
	Setting range	0~3	
PC-32	Simple PLC segment 7th runtime	Factory value	0.0s (h)
	Setting range	0.0s (h) ~6553.5s (h)	
PC-33	Simple PLC 7th Acceleration and Deceleration Time	Factory value	0
	Setting range	0~3	
PC-34	Simple PLC segment 8th runtime	Factory value	0.0s (h)
	Setting range	0.0s (h) ~6553.5s (h)	
PC-35	Simple PLC Section 8th Acceleration and Deceleration Time	Factory value	0
	Setting range	0~3	
PC-36	Simple PLC segment 9th runtime	Factory value	0.0s (h)
	Setting range	0.0s (h) ~6553.5s (h)	

PC-37	Simple PLC Section 9th Acceleration and Deceleration Time	Factory value	0
	Setting range	0~3	
PC-38	Simple PLC 10th runtime	Factory value	0.0s (h)
	Setting range	0.0s (h) ~6553.5s (h)	
PC-39	Simple PLC 10th Acceleration and Deceleration Time	Factory value	0
	Setting range	0~3	
PC-40	Simple PLC segment 11th runtime	Factory value	0.0s (h)
	Setting range	0.0s (h) ~6553.5s (h)	
PC-41	Simple PLC 11th Acceleration and deceleration times	Factory value	0
	Setting range	0~3	
PC-42	Simple PLC 12th runtime	Factory value	0.0s (h)
	Setting range	0.0s (h) ~6553.5s (h)	
PC-43	Simple PLC 12th Acceleration and Deceleration Time	Factory value	0
	Setting range	0~3	
PC-44	Simple PLC Section 13th Runtime	Factory value	0.0s (h)
	Setting range	0.0s (h) ~6553.5s (h)	
PC-45	Simple PLC 13th Acceleration and deceleration times	Factory value	
	Setting range	0~3	
PC-46	Simple PLC 14th runtime	Factory value	
	Setting range	0.0s (h) ~6553.5s (h)	
PC-47	Simple PLC 14th Acceleration and deceleration times	Factory value	
	Setting range	0~3	
PC-48	Simple PLC Section 15th Runtime	Factory value	
	Setting range	0.0s (h) ~6553.5s (h)	

PC-49	Simple PLC 15th Acceleration and Deceleration Time	Factory value
	Setting range	0~3
PC-50	Simple PLC runtime unit	Factory value
	Setting range	0S (seconds)

This parameter determines the given channel of the multi-segment instruction 0.

PC-51	Setting range	1	h (hour)	
	Multi-segment instruction 0 given way		Factory value	0
	Setting range	0	Function code PC-00 given	
		1	AI1	
		2	AI2	
		3	AI3	
		4	PULSE Pulse	
		5	PID	
		6	Preset frequency (P0-08) is given, UP/DOWN can be modified, power down memory.	

Multi-segment instruction 0 can be selected with a variety of options other than PC-00, making it easy to switch between multi-short instructions and other given methods. Switching between the two frequency sources is easily achieved when either the multi-segment instruction is used as the frequency source or the simple PLC is used as the frequency source.

PC-52	Multi-speed preference	Factory value	0
	Setting range	0: no priority, 1: priority	

Multi-speed priority means that when the multi-speed terminals are not all 0, the multi-speed command value is executed with priority

PC-53	Multi-band frequency unit selection	Factory value	1
	Setting range	0: % 1: Hz	

Used to select the unit of multi-band speed AC-00~AC-15 to meet the needs of different occasions for multi-band speed frequency unit

Group PD Communication parameters

Please refer to Appendix I: Modbus Communication Protocols

PE group User-customized function codes

PE-00	User function code 0	Factory value	uU3.17
	Setting range	P0.00~PP.xx, H0.00~Ax.xx, U0.xx	
PE-01	User function code 1	Factory value	uU3.16
	Setting range	Same as PE-00	
PE-02	User function code 2	Factory value	0.0s (h)
	Setting range	Same as PE-00	
PE-03	User function code 3	Factory value	uP0.00
	Setting range	Same as PE-00	
PE-04	User function code 4	Factory value	uP0.00
	Setting range	Same as PE-00	
PE-05	User function code 5	Factory value	uP0.00
	Setting range	Same as PE-00	
PE-06	User function code 6	Factory value	uP0.00
	Setting range	Same as PE-00	
PE-07	User function code 7	Factory value	uP0.00
	Setting range	Same as PE-00	
PE-08	User function code 8	Factory value	uP0.01
	Setting range	Same as PE-00	
PE-09	User function code 9	Factory value	uP0.00
	Setting range	Same as PE-00	
PE-10	User function code 10	Factory value	uP0.00
	Setting range	Same as PE-00	
PE-11	User function code 11	Factory value	uP0.00
	Setting range	Same as PE-00	

PE-12	User function code 12	Factory value	uP.00
	Setting range	Same as PE-00	
PE-13	User function code 13	Factory value	uP0.00
	Setting range	Same as PE-00	
PE-14	User function code 14	Factory value	uP0.00
	Setting range	Same as PE-00	
PE-15	User function code 15	Factory value	uP0.00
	Setting range	Same as PE-00	
PE-16	User function code 16	Factory value	uP0.00
	Setting range	Same as PE-00	
PE-17	User function code 17	Factory value	uP0.00
	Setting range	Same as PE-00	
PE-18	User function code 18	Factory value	uP0.00
	Setting range	Same as PE-00	
PE-19	User function code 19	Factory value	uP0.00
	Setting range	Same as PE-00	
PE-20	User function code 20	Factory value	uU0.68
	Setting range	Same as PE-00	
PE-21	User function code 21	Factory value	uU0.69
	Setting range	Same as PE-00	
PE-22	User function code 22	Factory value	uP0.00
	Setting range	Same as PE-00	
PE-23	User function code 23	Factory value	uP0.00
	Setting range	Same as PE-00	
PE-24	User function code 24	Factory value	uP0.00

	Setting range	Same as PE-00	
PE-25	User function code 25	Factory value	uP0.00
	Setting range	Same as PE-00	
PE-26	User function code 26	Factory value	uP0.00
	Setting range	Same as PE-00	
PE-27	User function code 27	Factory value	uP0.00
	Setting range	Same as PE-00	
PE-28	User function code 28	Factory value	uP0.00
	Setting range	Same as PE-00	
PE-29	User function code 29	Factory value	
	Setting range	Same as PE-00	
PE-30	User function code 30	Factory value	uP0.00
	Setting range	Same as PE-00	
PE-31	User function code 31	Factory value	uP0.00
	Setting range	Same as PE-00	

This group of function codes is a User-customized parameter group.

Users can select the required parameters among all function codes and summarize them into PE group as User-customized parameters to facilitate operations such as viewing and changing etc. PE group provides up to 30 User-customized parameters, and the value of PE group parameter display is P0.00 , which means that the user function code is empty. When entering the User-customized parameter mode, the display function code is defined by PE-00~PE-31, and the order is the same as that of the PE group function code, and it is skipped if it is P0-00.

Group PP Function Code Management

PP-00	User password	Factory value	0
	Setting range	0~65535	

PP-00 Set any non-zero number, then the password protection function takes effect. The next time you enter the menu, you must enter the password correctly, otherwise you cannot view and modify the function parameters, please remember the user password set.

Setting PP-00 to 00000 clears the set user password and invalidates the password protection function.

PP-01	Parameter initialization		Factory value	0
	Setting range	0	No operation	
		1	Restore factory parameters, excluding motor parameters	
		2	Clearing Recorded Information	
		4	Restore user backup parameters	
		501	Backup user's current parameters	

1. Restore the factory set value, excluding motor parameters

After setting PP-01 to 1, most of the drive's functional parameters are restored to the manufacturer's factory parameters, but Motor Parameters, Frequency Command Decimal Point (P0-22), Fault Record Information, Accumulated Runtime (P7-09), Accumulated Power-Up Time (P7-13), and Accumulated Power Consumption (P7-14) are not restored.

2. Clearing of recorded information

Clears drive fault log information, accumulated runtime (P7-09), accumulated power-up time (P7-13), and accumulated power consumption (P7-14).

3. Backup the user's current parameters

Backs up the parameters set by the current user. Backup the set values of all current function parameters. In order to facilitate the customer to recover after the parameter adjustment is wrong.

4. Restore user backup parameters

Restore the user parameters previously backed up, i.e. restore the parameters backed up by setting PP-01 to 501.

PP-02	Functional parameter way to display attributes		Factory value	11
	Setting range	Ones place	Group U display selection	
		0	Not shown	
		1	Demonstrate	

		Tens place	Group A Display Selection	
		0	Not shown	
		1	Demonstrate	
PP-03	Individual parameter mode display selection		Factory value	00
	Setting range	Ones place	User-customized parameter display options	
		0	Not shown	
		1	Demonstrate	
		Tens place	User change parameter display selection	
		0	Not shown	
		1	Demonstrate	

Parameter display mode is set up mainly to facilitate the user according to the actual need to view the different forms of arrangement of functional parameters, to provide three kinds of parameter display mode.

Name	Description
Functional parameter approach	Sequential display of drive function parameters, respectively, P0~PP, H0~AP, U0~UP function parameter sets
User-customized parameter approach	User-customized display of individual functional parameters (up to 32 customized), with the user determining the functional parameters to be displayed via PE groups
User change parameter method	Functional parameters that do not correspond to the factory parameters

When the personality parameter mode display selection (PP-03) exists one for the display, at this time you can switch into different parameter display mode through the JOG/QUICK key, the default value is only the function parameter mode display each parameter display mode display code for:

Parameter display mode	Demonstrate
Functional parameter method	-bASE
User-customized parameter approach	-USER
User change parameter method	--C--

The driver provides two groups of personalized parameter display methods: User-customized parameter method and user-change parameter method. The user customized parameter group is the parameter set by the user to the PE group, and the maximum number of parameters can be selected is 32, and these parameters are summarized together, which can be convenient for customers to debug.

Under the User-customized parameter mode, a symbol u is added by default before the User-customized function code e.g. P1-00, under the User-customized parameter mode, the display effect is uP1-00 for the user-change parameter mode for the user to have changed the parameter so that it is different from the factory's value. User change parameter group is beneficial for customers to view the summary of changed parameters, which is convenient for finding problems on site.

In the user change parameter mode, a symbol c is added by default in front of the User-customized function code.

For example: P1-00, in the user change parameter mode, the display effect is cP1-00 for

PP-04	Function Code Modification Properties		Factory value	0
	Setting range	0	Modifiable	
		1	Unmodifiable	

The user sets whether the function code parameters can be modified or not, and is used to prevent the risk of the function parameters being altered by mistake.

When this function code is set to 0, all function codes can be modified; when it is set to 1, all function codes can only be viewed and cannot be modified.

PP-05	Model Setting	1: G-type machine 2: P-machine	1	★

For G/P combined model users can use this parameter to set the drive to work in G-type machine or P-type machine state, after changing this parameter, the parameter P0-00 display value will be modified accordingly.

For the same drive, the rated power after modifying to P-type machine state will be increased by one step than working in G-type machine state, so after modifying this parameter, the parameters related to drive power and motor power will be changed automatically.

Group H0 Torque control and limiting parameters

H0-00	Speed/torque control mode selection		Factory value	0
	Setting range	0	Speed control	
		1	Torque control	

Used to select the drive control method: speed control or torque control.

The multi-function DI digital input terminal has two functions related to torque control: torque control inhibit (function 29) and speed control/torque control switching (function 46). These two terminals are used in conjunction with H0-00 to switch between speed and torque control.

When the speed control/torque control switching terminal is invalid, the control mode is determined by H0-00. If the speed control/torque control switching is valid, the control mode corresponds to the reverse of the value of H0-00.

In any case, when the torque control prohibition terminal is active, the drive is fixed to the speed control mode.

H0-01	Torque setting source selection in torque control mode		Factory value	0
	Setting range	0	Digital Setting (H0-03)	
		1	AI1	
		2	AI2	
		3	AI3	
		4	PULSE pulse	
		5	Communication protocol	
		6	MIN (AI1, AI2)	
		7	MAX (AI1, AI2)	
H0-03	Digital setting of torque in torque control mode		Factory value	0
	Setting range		-200.0 per cent ~200.0 per cent	

The torque setting adopts the relative value of 100.0% corresponding to the rated torque of the drive. The setting range -200.0% to 200.0% indicates that the maximum torque of the inverter is 2 times the rated torque of the drive.

When the torque setting is in mode 1 to 7, 100% of communication, Analog input and pulse input corresponds to H0-03.

H0-05	Torque control forward maximum frequency	Factory value	50.00Hz
	Setting range	0.00Hz to maximum frequency (P0-10)	
H0-06	Torque control reverse maximum frequency	Factory value	50.00Hz
	Setting range	0.00Hz to maximum frequency (P0-10)	

Used to set the maximum forward or reverse operating frequency of the drive in the torque control mode.

When the driver torque control, if the load torque is less than the motor output torque, the motor speed will keep increasing, and to prevent accidents such as flying in the mechanical system, it is necessary to limit the maximum speed of the motor at the time of torque control.

H0-07	Torque controlled acceleration time	Factory value	50.00Hz
	Setting range	0.00s~65000s	
H0-08	Torque controlled deceleration time	Factory value	50.00Hz
	Setting range	0.00s~65000s	

In the torque control mode, the difference between the motor output torque and the load torque determines the rate of change of the motor and load speed, so the motor speed may change rapidly, causing problems such as noise or excessive mechanical stress. By setting the acceleration and deceleration time of the torque control, the motor speed can be changed gently.

However, for occasions where a fast torque response is required, it is necessary to set the torque control acceleration and deceleration time to 0.00s.

For example: two motors are hardwired to drag the same load, in order to ensure uniform distribution of load, set one drive as the host, using speed control, another drive as the slave and using torque control, the host's actual output torque as the slave's torque command, at this time the slave's torque needs to follow the host quickly, then the slave's torque control acceleration and deceleration time is 0.00s.

Group H1 Virtual DI input terminal, Virtual IO

H1-00	Virtual VDI1 Terminal Function Selection	Factory value	0
	Setting range	0~59	
H1-01	Virtual VDI2 Terminal Function Options	Factory value	0
	Setting range	0~59	
H1-02	Virtual VDI3 Terminal Function Options	Factory value	0
	Setting range	0~59	
H1-03	Virtual VDI4 Terminal Function Options	Factory value	0
	Setting range	0~59	
H1-04	Virtual VDI5 Terminal Function Options	Factory value	0
	Setting range	0~59	

Virtual VDI1~VDI5 are functionally identical to the DI digital input terminals on the control board and can be used as multi-functional digital inputs, please refer to the introduction of P4-00~P4-09 for detailed settings.

H1-05	Virtual VS terminal effective state setting mode		Factory value	00000
	Setting range	Ones place	Virtual VDI1	
		0	The state of the virtual VDOx determines whether the VS is valid or not	
		1	VS validity is set by function codes H1-06.	
		Tens place	Virtual VDI2 (0~1, same as above)	
		Hundreds place	Virtual VDI3 (0~1, same as above)	
		Thousands place	Virtual VDI4 (0~1, same as above)	
		Ten thousands place	Virtual VDI5 (0~1, same as above)	
H1-06	Virtual VS terminal status setting		Factory value	00000
	Setting range	Ones place	Virtual VDI1	
		0	Null	
		1	Efficiently	
		Tens place	Virtual VDI2 (0~1, same as above)	
		Hundreds place	Virtual VDI3 (0~1, same as above)	
		Thousands place	Virtual VDI4 (0~1, same as above)	
		Ten thousands place	Virtual VDI5 (0~1, same as above)	

Unlike normal digital input terminals, the state of the virtual VS can be set in two ways and selected by H1-05. When the selected VS state is determined by the state of the corresponding virtual VDO, whether the VS is valid or not depends on whether the VDO output is valid or invalid, and the VSx is uniquely bound to the VDOx (x is 1~5).

When the selection of the VS state is set by a function code, the state of the virtual input terminal is determined by the binary bits of function code H1-06, respectively. The following is an example of how to use the virtual VDI. Example 1: When the VDI state is determined by selecting the VDO state, the following function is to be completed: "When the AI1 input exceeds the upper and lower limits, the drive fails to give an alarm and stops," and the following setting method can be used:

Set the function of VDI1 as "user-defined fault 1" (H1-00=44); set the effective state mode of VDI1 terminal to be determined by VDO1 (H1-05=xxx0); set the output function of VDO1 as "AI1 input exceeds upper and lower limits" (H1-11=31); then when AI1 input exceeds upper and lower limits, the output of VDO1 is ON. "(H1-11=31); then the AI1 input exceeds the upper and lower limits, the VDO1 output is ON state, at this time the VDI1 input terminal state is valid, the drive VDI1 receives a user-defined fault 1, the drive will be fault alarm Err27 and shutdown.

Example 2: When selecting function code H1-06 to set the VS state, the following function is to be completed: "When the drive is powered up, it automatically enters the operation state", and the following setting method can be used:

Set the function of VDI1 as "forward operation" (H1-00=1); set the effective state mode of VDI1 terminal to be set by the function code (H1-05=xxx1); set the state of VDI1 terminal to be effective (H1-06=xxx1); set the command source as "terminal control" (P0-02=1); set the start-up protection selection as "no protection" (P8-18=0); then the drive is powered on and finished with "no protection". Terminal control" (P0-02 = 1); set the start-up protection selection for "no protection" (P8-18 = 0); then the drive power-up to complete the initialization, VDI1 is detected as valid, and this terminal corresponds to the positive operation, which is equivalent to the drive receives a terminal positive operation command, the drive then starts the positive operation. The drive then starts to run positively.

H1-07	Function selection when AI1 terminal is used as DI input terminal		Factory value	0
	Setting range		0~59	
H1-08	Function selection when AI2 terminal is used as DI input terminal		Factory value	0
	Setting range		0~59	
H1-09	Function selection when AI3 terminal is used as DI input terminal		Factory value	0
	Setting range		0~59	
H1-10	Valid mode selection when Analog input is used as DI input terminal		Factory value	000
	Setting range	Ones place	AI1	
		0	Active High	
		1	Active Low	
		Hundreds place	AI2 (0~1, same bit)	
		Thousands place	AI3 (0~1, same bit)	

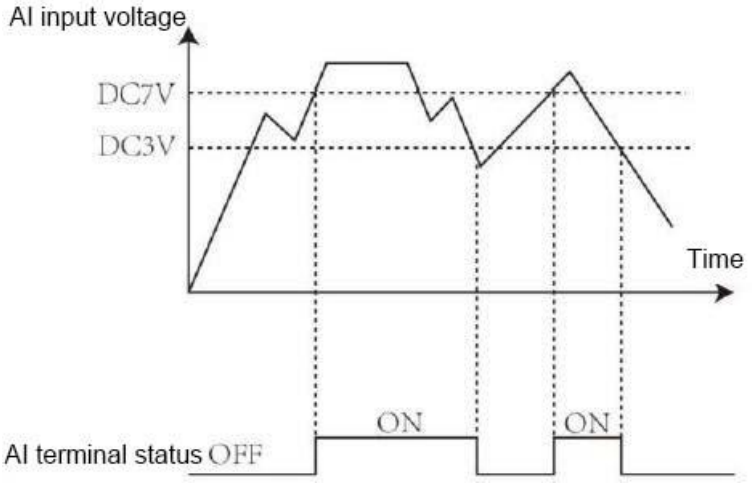

Judgement of valid status of Analog input terminals

This group of function codes is used to use the Analog input as a DI input terminal. when the Analog input is used as a DI input terminal, when the Analog input input voltage is greater than 7V, the status of the Analog input terminal will be high, and when the Analog input voltage is lower than 3V, the status of the Analog input terminal will be low. the hysteresis loop between 3V~7V is used to determine whether a high level or a low level is valid for the Analog input when the Analog input is used as a DI input terminal. Between 3V and 7V, the hysteresis loop H1-10 is used to determine whether the Analog input is valid when it is used as a DI input terminal, or whether the Analog input is valid when it is high or low. As for the function setting when the Analog input is used as a DI input terminal, it is the same as the normal DI input terminal setting, please refer to the description of DI input terminal setting in P4 group.

H1-11	Virtual VDO1 output function selection	Factory value	0
	Setting range	0: Internal short to Sx input terminal on PCB 1~40: see P5 group DO output terminal selection	
H1-12	Virtual VDO2 output function selection	Factory value	0
	Setting range	0: Internal short to Sx input terminal on PCB 1~40: see P5 group DO output terminal selection	
H1-13	Virtual VDO3 output function selection	Factory value	0
	Setting range	0: Internal short to Sx input terminal on PCB 1~40: see P5 group DO output terminal selection	
H1-14	Virtual VDO4 output function selection	Factory value	0
	Setting range	0: Internal short to Sx input terminal on PCB 1~40: see P5 group DO output terminal selection	
H1-15	Virtual VDO5 output function selection	Factory value	0
	Setting range	0: Internal short to Sx input terminal on PCB 1~40: see P5 group DO output terminal selection	

H1-16	VDO1 output delay time	Factory value	0.0s
	Setting range	0.0s~3600.0s	
H1-17	VDO2 output delay time	Factory value	0.0s
	Setting range	0.0s~3600.0s	
H1-18	VDO3 output delay time	Factory value	0.0s
	Setting range	0.0s~3600.0s	
H1-19	VDO4 output delay time	Factory value	0.0s
	Setting range	0.0s~3600.0s	
H1-20	VDO5 Output Delay Time	Factory value	0.0s
	Setting range	0.0s~3600.0s	
H1-21	VDO output terminal valid state selection	Factory value	00000
	Setting range	Ones place	VDO1
		0	Positive logic
		1	Inverse logic
		Tens place	VDO2 (0~1, same bit)
		Hundreds place	VDO3 (0~1, same bit)
		Thousands place	VDO4 (0~1, same bit)
		Ten thousands place	VDO5 (0~1, same bit)

The virtual digital output function, similar to the control board DO output function, can be used to cooperate with the virtual digital input VSx to achieve some simple logic control.

When the virtual VDOx output function is selected as 0, the output state of VDO1~VDO5 is determined by the input state of DI1~DI5 on the control board, and at this time, VDOx corresponds to Sx one by one.

When the virtual VDOx output function is selected as non-zero, the function setting and usage of VDOx are the same as the parameters related to DO output of P5 group, please refer to the description of the related parameters of P5 group.

The same VDOx output valid state can be selected as positive logic or anti-logic, which is set by H1-21. The application examples of VSx include the use of VDOx, please refer to H2 Group 2 Motor Parameters This series of drives can be switched between two motors, and the two motors can be set up separately with the motor nameplate parameters, can be tuned with the motor parameters separately, can be selected separately with V/F control or vector control, can be set up separately with encoder parameters, and can be set up separately with the parameters related to the performance of the V/F control or the vector control. V/F control or vector control, encoder-related parameters can be set separately, and parameters related to V/F control or vector control performance can be set individually.

All the parameters of group H2 are the same as the parameters of the 1st motor, so we will not repeat the explanation here, and the user can refer to the description of the parameters of the 1st motor.

H2-00	Motor type selection		Factory value	0
	Setting range	0	Ordinary asynchronous motor	
		1	Variable frequency asynchronous motors	
H2-01	Rating		Factory value	Determination of model
	Setting range		0.1kW~1000.0kW	
H2-02	Rated voltage		Factory value	Determination of model
	Setting range		1V~2000V	
H2-03	Rated current		Factory value	Determination of model
	Setting range		0.01A~655.35A (Drive power <= 55kW) 0.1A~6553.5A (Drive power > 55kW)	
H2-04	Rated frequency		Factory value	Determination of model
	Setting range		0.01Hz~ max. frequency	
H2-05	Rated speed		Factory value	Determination of model
	Setting range		1rpm~65535rpm	
H2-06	Asynchronous motor stator resistance		Factory value	Determination of model
	Setting range		0.001Ω~65.535Ω (Drive power <= 55kW) 0.0001Ω~6.5535Ω (Drive power > 55kW)	
H2-07	Asynchronous motor rotor resistance		Factory value	Determination of model
	Setting range		0.001Ω~65.535Ω (Drive power <= 55kW) 0.0001Ω~6.5535Ω (Drive power > 55kW)	
H2-08	Leakage reactance of asynchronous motors		Factory value	Determination of model
	Setting range		0.01mH~655.35mH (Drive power <= 55kW) 0.001mH~65.535mH (Drive power > 55kW)	
H2-09	Asynchronous motor mutual inductive resistance		Factory value	Determination of model
	Setting range		0.1mH~6553.5mH (Drive power <= 55kW) 0.01mH~655.35mH (Drive power > 55kW)	
H2- 10	Asynchronous motor no-load current		Factory value	Determination of model
	Setting range		0.01A~H2-03 (Drive power <= 55kW) 0.1A~H2-03 (Drive power > 55kW)	

H2-27	Number of encoder lines		Factory value	1024
	Setting range		1~65535	
H2-28	Encoder Type		Factory value	0
	Setting range	0	ABZ Incremental Encoders	
		1	UVW Incremental Encoders	
		2	Rotary Transformer	
		3	Sine Cosine Encoder	
		4	Wire-saving method UVW encoders	
H2-29	Speed Feedback PG Selection	Factory value	0	
	Setting range	0	Local PG	
		1	Extended PG	
		2	PULSE pulse input (DI5)	
H2-30	ABZ Incremental Encoder AB Phase Sequence	Factory value	0	
	Setting range	0	Forward	
		1	Opposite direction	
H2-31	Encoder mounting angle	Factory value	0	
	Setting range		0.0°~359.9°	
H2-32	UVW Encoder UVW Phase Sequence		Factory value	0
	Setting range	0	Forward	
		1	Opposite direction	
H2-33	UVW Encoder Bias Angle		Factory value	0.0°
	Setting range		0.0°~359.9°	
H2-34	Rotary Transformer Pole Pairs		Factory value	1
	Setting range		1~65535	
H2-36	Speed Feedback PG Break Detection Time		Factory value	0.0s
	Setting range		0.0: No action 0.1s~10.0s	
H2-37	Tuning Options		Factory value	0

	Setting range	0	No operation	
		1	Static tuning of asynchronous motors	
		2	Complete tuning of asynchronous motors	
		11	Synchronous motor stationary tuning	
		12	Synchronous motor complete tuning	
H2-38	Velocity loop proportional gain 1		Factory value	30
	Setting range		1~100	
H2-39	Velocity loop integration time1		Factory value	0.50s
	Setting range		0.01s~10.00s	
H2-40	Switching frequency 1		Factory value	5.00Hz
	Setting range		0.00~H2-43	
H2-41	Velocity loop proportional gain 2		Factory value	15
	Setting range		0~100	
H2-42	Velocity loop integration time 2		Factory value	1.00s
	Setting range		0.01s~10.00s	
H2-43	Switching frequency 2		Factory value	10.00Hz
	Setting range		H2-40~ Maximum Output Frequency	
H2-44	Vector Control Differential Gain		Factory value	100%
	Setting range		50%~200%	
H2-45	Velocity loop filter time constant		Factory value	0.050s
	Setting range		0.000s~0.100s	
H2-46	Vector control overexcitation gain		Factory value	64
	Setting range		0~200	
H2-47	Upper torque limit source in speed control mode		Factory value	0
	Setting range	0	H2-48 setting	
		1	AI1	
		2	AI2	
		3	AI3	
		4	PULSE setting	

		5	Communication Setting	
		6	MIN (AI1, AI2)	
		7	MAX (AI1, AI2)	
H2-48	Setting of the upper torque limit number in speed control mode		Factory value	150.0 per cent
	Setting range		0.0 per cent ~200.0 per cent	
H2-51	Excitation regulation proportional gain		Factory value	2000
	Setting range		0~20000	
H2-52	Excitation Regulation Integral Gain		Factory value	1300
	Setting range		0~20000	
H2-53	Torque adjustment proportional gain		Factory value	2000
	Setting range		0~20000	
H2-54	Integral gain for torque regulation		Factory value	1300
	Setting range		0~20000	
H2-55	Speed Ring Points Properties		Factory value	0
	Setting range		Individual digits: Integral separation 0: not valid 1: valid	
H2-61	2nd motor control method		Factory value	2
	Setting range	2	V/F control	
H2-62	Setting range	0	Same as 1st motor	
		1	Acceleration and deceleration time 1	
		2	Acceleration and deceleration time 2	
		3	Acceleration and deceleration time 3	
		4	Acceleration and deceleration time 4	
H2-63	2nd Motor Torque Boost		Factory value	Determination of model
	Setting range		0.0%: Automatic torque increase 0.1% 30.0 per cent	
H2-65	2nd motor oscillation suppression gain		Factory value	Determination of model
	Setting range		0~100	

Group H5 Control optimization parameters

H5-00	DPWM switching upper frequency	Factory value	8.00HZ
	Setting range	0.00HZ~P0-10 (Maximum frequency)	

Valid only for V/F control, the wave generation method for V/F operation of asynchronous motor is determined below this value for 7-band continuous modulation method, and vice versa for 5-band intermittent modulation method.

The switching loss of the driver is larger for 7-segment continuous modulation, but it brings smaller current ripple; the switching loss is smaller for 5-segment intermittent commissioning mode, and the current ripple is larger; however, it may lead to the instability of the motor operation at high frequency, and generally does not need to be modified. For V/F operation instability, please refer to function code P3-11, and for driver loss and temperature rise, please refer to function code P0-15.

H5-01	PWM modulation mode		Factory value	0
	Setting range	0	Asynchronous modulation	
		1	Synchronous modulation	

Effective only for V/F control. Synchronous modulation, which means that the carrier frequency changes linearly with the output frequency change, ensuring that the ratio of the two (carrier ratio) remains constant, is generally used when the output frequency is high, which is beneficial to the quality of the output voltage.

At lower output frequencies (below 100Hz), synchronous modulation is generally not required because the ratio of the carrier frequency to the output frequency is relatively high at this time, and the advantages of asynchronous modulation are a little more obvious.

Synchronous modulation takes effect when the operating frequency is higher than 85 Hz, and below this frequency it is fixed as asynchronous modulation mode.

H5-02	Dead zone compensation mode selection		Factory value	1
	Setting range	0	Non-compensatory	
		1	Compensation mode 1	
		2	Compensation model 2	

This parameter generally does not need to be modified, only when there are special requirements for the quality of the output voltage waveform, or when there are abnormalities such as oscillations in the motor, it is necessary to try to switch to select a different compensation mode. It is recommended to use compensation mode 2 for high power.

H5-03	Random PWM depth		Factory value	0
	Setting range	0	Random PWM Invalid	
		1~10	PWM carrier frequency random depth	

Setting the random PWM can make the monotonous and harsh motor sound softer and can help to reduce the external electromagnetic interference. When setting the random PWM depth to 0, the random PWM is invalid. Adjusting the random PWM to different depths will give different results.

H5-04	Fast Current Limit Enable		Factory value	1
	Setting range	0	Disable	
		1	Enable	

Enabling the fast current limit function minimizes overcurrent faults in the drive and ensures uninterrupted operation of the drive. If the drive time fast current limit will alarm fault Err40, indicating that the drive is overloaded and needs to be shut down.

H5-05	Current Detection Compensation	Factory value	0
	Setting range	0~100	

Used to set the current detection compensation of the driver, setting it too large may result in degradation of control performance. Generally no modification is required.

H5-06	Undervoltage point setting	Factory value	350
	Setting range	200~450	

Used to set the voltage value of the drive undervoltage fault Err09 for different voltage levels of the drive voltage points:

Single-phase 220V or three-phase 220V: 200V

Three-phase 380V: 350V

Three-phase 480V: 450V

H5-07	0HZ output function selection		Factory value	1
	Setting range	0	No output	
		1	Normal output	
		2	DC braking (braking current P6-13)	

Zero HZ output selection, zero HZ can choose normal output, no output and DC braking output, braking current P6-13

H5-08	Dead time adjustment	Factory value	150 per cent
	Setting range	100%~200%	

Set for 1140V voltage level. Adjusting this value can improve the effective usage rate of voltage, while adjusting too small will easily lead to unstable operation of the system . Users are not recommended to change this value.

Group H6 Analog input curve setting

H6-00	Analog Input Curve 4 Minimum Input	Factory value	0.00V
	Setting range	-10.00V~H6-02	
H6-01	Analog Input Curve 4 Minimum Input Correspondence Setting	Factory value	0.0 per cent
	Setting range	-100.0 per cent ~100.0 per cent	
H6-02	Analog input curve 4 inflection points 1 input	Factory value	3.00V
	Setting range	H6-00~H6-04	
H6-03	Analog input curve 4 inflection point 1 input corresponding setting	Factory value	30.0 per cent
	Setting range	-100.0 per cent ~100.0 per cent	
H6-04	Analog input curve 4 inflection points 2 inputs	Factory value	6.00V
	Setting range	H6-02~H6-06	
H6-05	Analog input curve 4 inflection point 2 input corresponding setting	Factory value	60.0 per cent
	Setting range	-100.0 per cent ~100.0 per cent	
H6-06	Analog input curve 4 Maximum input	Factory value	10.00V
	Setting range	H6-06~10.00V	
H6-07	Analog Input Curve 4 Maximum Input Correspondence Setting	Factory value	100.0 per cent
	Setting range	-100.0 per cent ~100.0 per cent	
H6-08	Analog Input Curve 4 Minimum Input	Factory value	0.00V
	Setting range	-10.00V~H6-10	
H6-09	Analog Input Curve 5 Minimum Input Correspondence Setting	Factory value	0.0 per cent
	Setting range	-100.0 per cent ~100.0 per cent	
H6-10	Analog input curve 5 inflection	Factory value	3.00V

	points 1 input		
	Setting range	H6-08~H6-12	
H6-11	Analog input curve 5 inflection point 1 input corresponding setting	Factory value	30.0 per cent
	Setting range	-100.0 per cent ~100.0 per cent	
H6-12	Analog input curve 5 inflection points 2 inputs	Factory value	6.00V
	Setting range	H6-10~H6-14	
H6-13	Analog Input Curve 5 Inflection Point 2 Input Correspondence Setting	Factory value	60.0 per cent
	Setting range	-100.0 per cent ~100.0 per cent	
H6-14	Analog input curve 5 Maximum input	Factory value	10.00V
	Setting range	H6-14~10.00V	
H6-15	Analog Input Curve 5 Maximum Input Corresponding Setting	Factory value	100.0 per cent
	Setting range	-100.0 per cent ~100.0 per cent	

Curves 4 and 5 function similarly to curves 1~3, but curves 1~3 are straight lines, while curves 4 and 5 are 4

point curves, a more flexible correspondence can be achieved. The following figure shows the schematic diagram of curve 4 to curve 5.

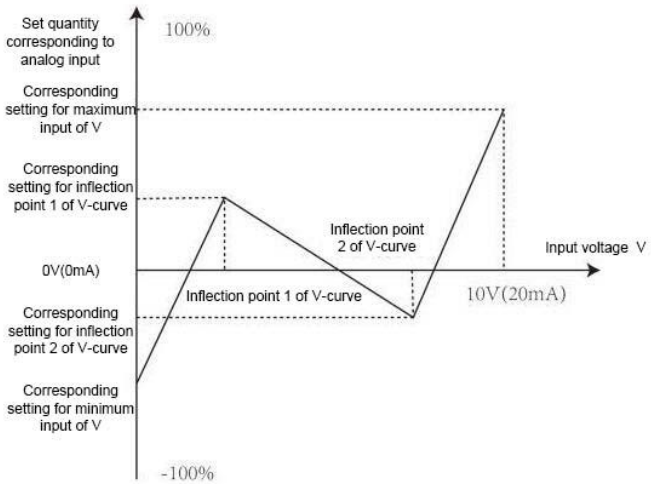

Schematic diagram of curve 4 and curve 5

When setting curve 4 and curve 5, it shall be noted that the minimum input voltage, inflection point 1 voltage, inflection point 2 voltage, and maximum voltage of the curves must be increased sequentially.

Analog Input Curve Selection P, is used to determine how Analog inputs AI1~AI3 are selected among the 5 curves.

H6-16	AI1 sets the jump point	Factory value	0.0 per cent
	Setting range	-100.0 per cent ~100.0 per cent	
H6-17	AI1 sets the jump range	Factory value	0.5 per cent
	Setting range	-100.0 per cent ~100.0 per cent	
H6-18	AI2 sets the jump point	Factory value	0.0 per cent
	Setting range	-100.0 per cent ~100.0 per cent	
H6-19	AI2 sets the jump range	Factory value	0.5 per cent
	Setting range	0.0%~100.0%	
H6-20	AI3 sets the jump point	Factory value	0.0 per cent
	Setting range	-100.0 per cent ~100.0 per cent	
H6-21	AI3 sets the jump range	Factory value	0.5 per cent
	Setting range	0.0%~100.0%	

Analog inputs AI1~AI3 are equipped with set value jump function.

The jump function is a function that fixes the Analog set value to the value at the jump point when the Analog set value changes in the interval above or below the jump point.

For example, the voltage of Analog input AI1 fluctuates above and below 5.00V, with a fluctuation range of 4.90V to 5.10V, and the minimum input of 0.00V for AI1 corresponds to 0.0%, and the maximum input of 10.00V corresponds to 100.0%, so that the detected AI1 corresponds to the setting of fluctuation between 49.0% and 51.0%.

Setting the AI1 setting jump point H6-16 to 50.0% and setting the AI1 setting jump amplitude H6-17 to 1.0%, the AI1 input above is processed by the jump function, and the AI1 input obtained corresponds to the setting fixed at 50.0%, and AI1 is transformed into a stable input, eliminating fluctuations.

Group H8 Point-to-Point Communication

H8-00	Point-to-point communication function options	Factory value	0
	Setting range	0: Invalid 1: Effective	

Select whether the peer-to-peer communication function is active.

Point-to-point communication refers to the direct data communication between two or more A8 inverters, which is realized by CANlink. It is used to realize the target frequency and target torque of one host machine to one or more slaves according to its own frequency or torque signal. When several inverters are connected, the CANlink card of the end inverter shall be connected to the terminating resistor, and the connection method is described in the appendix.

When point-to-point communication is active, the CANlink communication addresses of the master and slave are automatically matched internally and do not need to be specially set.

The point-to-point communication rate is set via Pd-00.

H8-01	Master-slave control	Factory value	0
	Setting range	0: Mainframe 1: Slave	

It is used to select whether the inverter is a master or a slave. For point-to-point communication, only the CANlink communication baud rate needs to be set, and the communication address is automatically assigned according to whether it is currently a master or a slave.

H8-02	Slave commands follow master-slave message interactions	Factory value	011
	Setting range	Bit: Slave command follow 0: Slave does not follow host run command run 1: Slaves follow the master to run the command run Tenth position: Slave fault message transmission 0: Slave fault message not transmitted 1: Slave fault information transmission Hundredths: Host shows slave down 0: Slave drop host does not report faults 1: Slave dropped host reports fault (ERR-16)	

When the slave is the master and P0-02=2 (communication control), the slave will follow if the value is set to 1.

Runs/shuts down with the host computer's run command;

The slave ten bit is set to 1. When the slave fails, a fault message is sent to the master;

The master's hundreds are set to 1. Alarms are generated when the slave is dropped.

H8-03	Slave receive data role selection	Factory value	0
	Setting range	0: Host operating frequency 1: Host target frequency	

In master-slave control mode, this function code is set to 0 for both the master and the slave, and the master and the slave communicate with each other according to the master-slave control message.

In sag control mode, this function code is set to 1 for both the master and the slave, and the master and the slave communicate with each other according to the sag control message.

H8-04	Received data zero bias (torque)	Factory value	0%
	Setting range	-100.00 per cent to 100.00 per cent	
H8-05	Receive Data Gain (Torque)	Factory value	1.00
	Setting range	-10.00~100.00	

The above 2 function parameters are mainly for correcting the received torque data and are used for user-defined relationship of torque commands between the master and the slave.

If the zero bias is denoted by b, the gain is denoted by k, the data received by the slave is denoted by x, and the data actually used is denoted by y, then the data actually used is y = kx + b; the range is -100.00% to 100.00%.

H8-06	Point-to-point communication interruption detection time	Factory value	0
	Setting range	0.0s~10.0s	

Sets the time for detecting interruption of host or slave communication for point-to-point communication, and sets it to 0 for no detection.

H8-07	Peer-to-peer communication host data sending cycle	Factory value	0.001s
	Setting range	0.001s~10.000s	

Sets the host send data period for point-to-point communication.

H8-08	Received data zero bias (frequency)	Factory value	0%
	Setting range	-100.00 per cent to 100.00 per cent	
H8-09	Receive Data Gain (Frequency)	Factory value	1.00
	Setting range	-10.00~100.00	

The above 2 function parameters mainly correct the received frequency data and are used to user-define the relationship between the frequency command between the master and the slave.

If the zero bias is denoted by b, the gain is denoted by k, the data received by the slave is denoted by x, and the data actually used is denoted by y, then the data actually used is y = kx + b;

The range is -100.00% to 100.00%.

H8-11	A window (on a computer screen)	Factory value	0.5HZ
	Setting range	0.2Hz~10.0Hz	

This function code is valid for master-slave control. Setting the change value ensures that the speeds of the master and slave are synchronized within the window range

Group H9 Sleep Wake-up function parameters

This set of parameters is mainly used to realize the sleep and wake-up functions in constant pressure water supply applications, please pay attention to the following matters when using them:

1) Please select the way to control the sleep function according to the application requirements H9-00

(2) If PID is used for the frequency source, whether or not the sleep state PID is operated is affected by the function code PA-28, in which case the operation of the PID at shutdown must be selected (PA-28=1)

3) In general, please set the wake-up frequency ((100.0%-H9-03 wake-up difference)*P0-10 maximum output frequency) greater than the sleep frequency H9-01.

H9-00	Sleep mode selection	Factory value	0
	Setting range	0~2	

0: Sleep function is disabled

1: The sleep function is controlled by the PID set value and feedback value, at this time, the frequency source P0-03 of the inverter must be PID.

2: Control the sleep function according to the operating frequency

During the operation of the inverter, when the set frequency is less than or equal to the H9-01 sleep frequency, it will enter the sleep state, on the contrary if the set frequency of the inverter is greater than the wake-up frequency (H9-03 Wake-up Difference * P0-10 Maximum Output Frequency), it will enter the wake-up state.

H9-01	Sleep mode selection	Factory value	30.00 Hz
	Setting range	0.00Hz to 50.00Hz	

When the sleep function is in effect and the operating frequency is lower than this value, the inverter starts to sleep (stop) after the sleep delay time H9-02.

See diagram: A = PID output; B = PID feedback value.

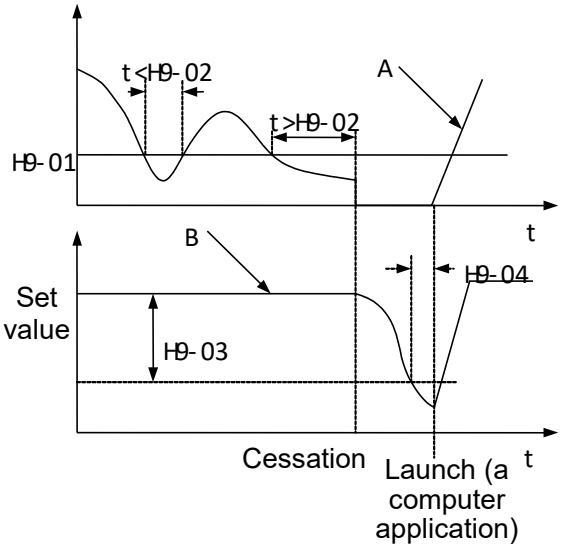

Frequency diagram of the sleep process

H9-02	Sleep delay time	Factory value	60.0S
	Setting range	0.0s～3600.0s	

Set the sleep delay time, refer to the above figure for the function.

H9-03	Wake-up call difference	Factory value	10.0 per cent
	Setting range	0.0% to 100.0%	

With H9-00 = 1, this parameter is referenced to the maximum pressure, i.e. the maximum pressure is 100 per cent;

With H9-00=2, this parameter is referenced to the maximum frequency P0-10, i.e. the maximum frequency is 100%;

When the wake-up difference between the given value and the feedback value exceeds the value defined by this parameter, the PID regulator restarts after wake-up delay H9-04.

PA-03=0 positive action, wake-up value = set value - wake-up difference; PA-03=1 negative action, wake-up value = set value + wake-up difference.

- C = Wake-up value, when parameter PA-03 = 1.
- D = Wake-up value, when parameter PA-03 = 0.
- E = Feedback value is greater than the wake-up value for a duration longer than parameter H9-04 (wake-up delay), the PID function restarts.
- F = Feedback value is less than the wake-up value for a duration longer than parameter H9-04 (wake-up delay), the PID function restarts.

See illustration:

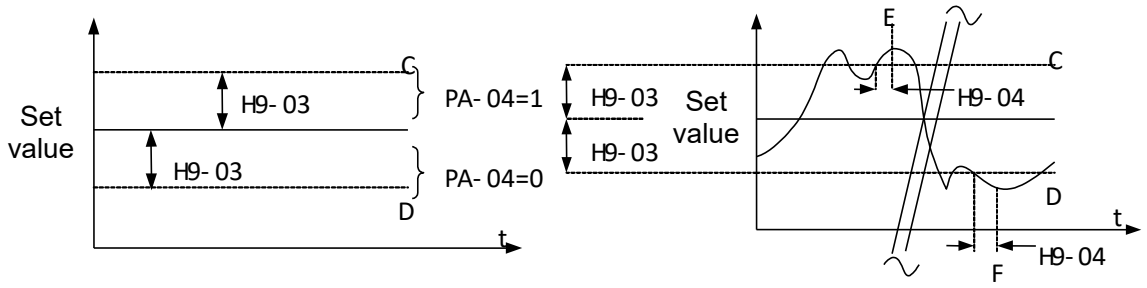

H9-04	wake-up delay	Factory value	0.5s
	Setting range	0.0s~3600.0s	

Set the wake-up delay time, function refer to the above figure

H9-05	Sleep delay frequency output selection	Factory value	0
	Setting range	0 to 1	

0: PID automatic adjustment 1: Sleep frequency H9-01

Group HA Function parameters of braking

HA-00	Brake control enable selection	Factory value	0
	Setting range	0 to 1	

The holding brake control process is shown in the figure below:

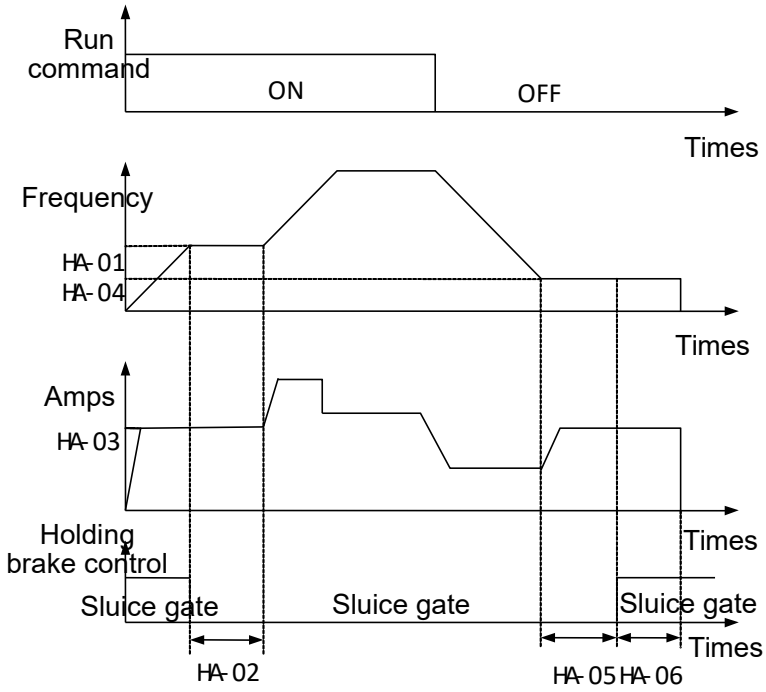

Figure. Diagram of holding brake control process

The braking process is as follows:

1) After receiving the run command, the inverter accelerates to the release frequency set by HA-01.

2) When the frequency reaches the frequency set by HA-01, the release signal is output through the function "Brake control output" of DO terminal 45 to control the release of the brake.

3) Run constant speed operation at the loose gate frequency. During this period the inverter control output current does not exceed the current set by HA-03.

4) After the frequency converter has reached the set value of HA-02 by running time at the loose gate frequency, it starts to accelerate to the set frequency.

5) When the inverter receives the stop command, it decelerates to the frequency set by HA-04 and runs at a constant speed at this frequency.

6) After the operating frequency reaches the set value of HA-04 and the holding frequency set by HA-05 is maintained for a delayed period, the holding signal is output through the function "Holding brake control output" of DO terminal No. 45 to control the holding brake suction.

7) The switching output "Brake control" terminal outputs the brake signal time to reach the set value of HA-06, the frequency converter blocks the output and enters into the shutdown state.

HA-01	Release frequency	Factory value	2.50HZ
	Setting range	0.00HZ~20.00HZ	

When the frequency reaches this setting value, the switching output "Brake control" terminal

outputs a brake signal (No. 45) to control the release of the brake. This value can be set according to the rated frequency of the motor. For V/F control, it can be set slightly larger.

HA-02	Release frequency maintenance time	Factory value	1.0s
	Setting range	0.0s to 20.0s	

After the switching output "Brake control" terminal outputs a brake signal, the frequency converter suspends acceleration within the set time. After the set time is reached, the inverter starts accelerating again. Set the setting time according to the time required to release the brake mechanism.

HA-03	Current limit value during holding	Factory value	120.0 per cent
	Setting range	50.0 per cent to 200.0 per cent	

The current is limited to this value until the frequency converter starts accelerating from the holding brake release frequency, i.e. until the holding brake mechanism is fully released.

HA-04	Holding frequency	Factory value	1.50 Hz
	Setting range	0.00HZ~20.00HZ	

When the inverter receives the stop command, it decelerates to the holding frequency set by HA-04 and runs at a constant speed at this frequency, waiting for the output of the holding control signal.

HA-05	Holding brake delay time	Factory value	0.0s
	Setting range	0.0s to 20.0s	

After the operating frequency reaches the holding frequency, the holding time set by HA-05 will be delayed. Then the switching output "Brake control" terminal outputs a release signal to control the brake.

HA-06	Holding frequency maintenance time	Factory value	1.0s
	Setting range	0.0s to 20.0s	

After the release signal is output from the switching output "Brake control" terminal, it is held for the time set by HA-06 to ensure that the brake mechanism is fully absorbed. Then the inverter blocks the output and enters the shutdown state.

HA-07	Loosening torque current detection value	Factory value	5.0 per cent
	Setting range	0.0% to 100.0%	

The relay outputs a release signal only when the torque current is greater than HA-07, and does not work when set to zero.

Group HC Analog input and Analog output calibration

HC-00	AI1 measured voltage 1	Factory value	Factory calibration
	Setting range	0.500V~4.000V	
HC-01	AI1 displays voltage 1	Factory value	Factory calibration
	Setting range	0.500V~4.000V	
HC-02	AI1 measured voltage 2	Factory value	Factory calibration
	Setting range	6.000V~9.999V	
HC-03	AI1 display voltage 2	Factory value	Factory calibration
	Setting range	6.000V~9.999V	
HC-04	AI2 measured voltage 1	Factory value	Factory calibration
	Setting range	0.500V~4.000V	
HC-05	AI2 display voltage 1	Factory value	Factory calibration
	Setting range	0.500V~4.000V	
HC-06	AI2 measured voltage 2	Factory value	Factory calibration
	Setting range	6.000V~9.999V	
HC-07	AI2 display voltage 2	Factory value	Factory calibration
	Setting range	-9.999V~10.000V	
HC-08	AI3 measured voltage 1	Factory value	Factory calibration
	Setting range	-9.999V~10.000V	
HC-09	AI3 display voltage 1	Factory value	Factory calibration
	Setting range	-9.999V~10.000V	
HC-10	AI3 measured voltage 2	Factory value	Factory calibration
	Setting range	-9.999V~10.000V	
HC-11	AI3 display voltage 2	Factory value	Factory calibration
	Setting range	-9.999V~10.000V	

This group of function codes is used to correct the Analog inputs AI1~AI3 to eliminate the effect of zero offset and gain of the Analog input input port. This group of function parameters has

been calibrated at the factory and will be restored to the factory calibrated value when the factory value is restored. Normally, no calibration is required at the application site.

Measured voltage refers to the actual voltage measured by multimeter and other measuring instruments, display voltage refers to the voltage display value sampled by the driver, see Group U0-Analog input voltage before correction (U0-21, U0-22, U0-23) display.

When calibrating, input two voltage values into each Analog input input port, and input the values measured by the multimeter and the values read by the Group U0, respectively, accurately into the above function codes, then the driver will automatically carry out the calibration of the zero deviation and gain of the Analog inputs.

HC-12	H01 Target voltage 1	Factory value	Factory calibration
	Setting range	0.500V~4.000V	
HC-13	H01 measured voltage 1	Factory value	Factory calibration
	Setting range	0.500V~4.000V	
HC-14	H01 Target voltage 2	Factory value	Factory calibration
	Setting range	6.000V~9.999V	
HC-15	H01 measured voltage 2	Factory value	Factory calibration
	Setting range	6.000V~9.999V	
HC-16	H02 Target voltage 1	Factory value	Factory calibration
	Setting range	0.500V~4.000V	
HC-17	H02 measured voltage 1	Factory value	Factory calibration
	Setting range	0.500V~4.000V	
HC-18	H02 Target voltage 2	Factory value	Factory calibration
	Setting range	6.000V~9.999V	
HC-19	H02 measured voltage 2	Factory value	Factory calibration
	Setting range	6.000V~9.999V	

This group of function codes is used to correct the Analog output AO. This group of function parameters has been calibrated at the factory and will revert to the factory-calibrated value when the factory value is restored. Generally, no calibration is required at the application site.

Target voltage refers to the theoretical output voltage value of the driver. Measured voltage refers to the actual output voltage value measured by a multimeter or other instrument.

Group U0 Monitoring

The U0 parameter group is used to monitor the drive operation status information, which can be viewed by the customer through the panel to facilitate on-site debugging, or the value of the parameter group can be read through the communication to be used for monitoring by the upper computer. Among them, U0-00~U0-31 are the operation and shutdown monitoring parameters defined in P7-03 and P7-04. For specific parameter function codes, parameter names and minimum units, refer to the Group U0 parameter table.

Function code	Name	Unit
U0-00	Operating frequency (Hz)	0.01Hz
U0-01	Setting frequency (Hz)	0.01Hz
U0-02	Busbar voltage (V)	0.1V
U0-03	Output Voltage (V)	1V
U0-04	Output Current (A)	0.01A
U0-05	Output power (KW)	0.1KW
U0-06	Output torque (%)	0.1%
U0-07	DI input status	1
U0-08	DO output status	1
U0-09	AI1 Voltage (V)	0.01V
U0-10	AI2 Voltage (V)	0.01V
U0-11	AI3 Voltage (V)	0.01V
U0-12	Numerical value	1
U0-13	Length value	1
U0-14	Load speed display	1
U0-15	PID Setting	1
U0-16	PID feedback	1
U0-17	PLC stage	1
U0-18	PULSE Input Pulse Frequency (Hz)	0.01kHz
U0-19	Feedback speed (unit 0.1Hz)	0.1Hz
U0-20	Remaining running time	0.1Min
U0-21	AI1 voltage before correction	0.001V

U0-22	AI2 voltage before correction	0.001V
U0-23	AI3 Voltage before correction	0.001V
U0-24	Linear velocity	1m/Min
U0-25	Current power-up time	1Min
U0-26	Current Runtime	0.1Min
U0-27	PULSE Input Pulse Frequency	1Hz
U0-28	Communication set value	0.01 per cent
U0-29	Encoder feedback speed	0.01Hz
U0-30	Mains frequency X display	0.01Hz
U0-31	Auxiliary frequency Y display	0.01Hz
U0-32	View any memory address value	1
U0-33	Synchronous motor rotor position	0.0°
U0-34	Motor temperature value	1°C
U0-35	Target torque (%)	0.1%
U0-36	Axis of rotation (math.)	1
U0-37	Power factor perspective	0.1
U0-38	ABZ position	0.0
U0-39	V/F separation target voltage	1V
U0-40	V/F split output voltage	1V
U0-41	DI input status visualization	1
U0-42	Visualization of DO input status	1
U0-43	JOG function status visualisation1	1
U0-44	JOG function status visualisation2	1
U0-59	Setting frequency (%)	0.01 per cent
U0-60	Operating frequency (%)	0.01 per cent
U0-61	Drive Status	1

Chapter 9 EMC (Electromagnetic Compatibility)

9.1 Definitions

Electromagnetic compatibility refers to the ability of electrical equipment to operate in an environment of electromagnetic interference without disturbing the electromagnetic environment and to achieve its function in a stable manner.

9.2 Introduction to EMC Standards

According to the requirements of the national standard GB/T12668.3, the drive needs to meet the requirements of two aspects, namely electromagnetic interference and anti-electromagnetic interference.

Our existing products comply with the latest international standard: IEC/EN61800-3: 2004 (Adjustable speed electrical power drive systems part 3: EMC requirements and specific test meTAods), which is the equivalent to Chinese national standards GB/T12668.3.

IEC/EN61800-3 mainly examines the drive from two aspects: electromagnetic interference and anti electromagnetic interference. Electromagnetic interference mainly tests the radiation interference, conduction interference, and harmonic interference of the drive (corresponding to the requirement for civilian drives). Anti electromagnetic interference mainly tests the conducted immunity, radiated immunity, surge immunity, fast mutation pulse group immunity, ESD immunity, and low-frequency end immunity of the drive (specific test items include: 1. immunity test for input voltage sag, interruption, and change; 2. immunity test for commutation notch; 3. harmonic input immunity test; 4. input frequency change test; 5. input voltage imbalance test; 6. input voltage fluctuation test). According to the strict requirements of IEC/EN61800-3 mentioned above, our products are tested and installed according to the guidance shown in 7.3, such products will have good electromagnetic compatibility in general industrial environment.

9.3 EMC Guidance

9.3.1 Effects of harmonic wave

The higher harmonic wave of the power supply can cause damage to the drive. Therefore, in some places where the quality of the power grid is poor, it is recommended to install an AC input reactor.

9.3.2 Electromagnetic interference and installation considerations:

There are two types of electromagnetic interference, one is the interference of electromagnetic noise from the surrounding environment on the drive, and the other is the interference generated by the drive on the surrounding equipment.

Installation Notes:

1) The grounding wire of the drive and other electrical products shall be well grounded;

2) Drive power input and output lines and light current electrical signal lines (such as: control lines) are in not parallel layout as possible, when possible, shall be in vertical layout;

3) It is recommended to use shielded cables or steel pipe shielded power lines for the output power lines of the drive, and the shielding layer shall be reliably grounded. For the leads of the interfered equipment, it is recommended to use twisted pair shielded control lines, and the shielding layer shall be reliably grounded;

9.3.3 Methods for treating interference caused by peripheral electromagnetic equipment on the drive:

The general reason for electromagnetic impact on the drive is the installation of a large number of relays, contactors, or electromagnetic brakes near the drive. When the drive malfunctions due to interference, it is recommended to use the following methods to solve it:

1) Install surge suppressors on devices that generate interference;

2) Install a filter at the input end of the drive;

3) The leads of the drive control signal line and detection line shall be shielded cables and the shielding layer shall be reliably grounded.

9.3.4 Methods for treating interference caused by drives on peripheral devices:

The noise in this part can be classified into two types: one is radiated interference from the drive, and the other is conducted interference from the drive. These two types of interference cause electromagnetic or electrostatic induction of surrounding electrical equipment. This further caused the device to malfunction. For several different interference situations, refer to the following methods to solve:

1) Instruments, receivers, and sensors used for measurement generally have weak signals. If they are close to the drive or in the same control cabinet, they are prone to interference and misoperation. It is recommended to use the following methods to solve the problem: try to stay away from the interference source as much as possible; do not arrange the signal line parallel to

the power line, especially do not tie them together in parallel; shielded wires are used for signal and power lines, and they are well grounded; add a ferrite magnetic ring on the output side of the drive (choose the suppression frequency within the range of 30-1000MHz), and wrap 2-3 turns in the same direction. For harsh situations, an EMC output filter can be installed;

2) When the interfered device and drive use the same power supply, it can cause conducted interference. If the above methods cannot eliminate the interference, an EMC filter shall be installed between the drive and the power supply;

3) Grounding peripheral devices separately can eliminate interference caused by leakage current in the drive grounding wire during common grounding.

9.3.5 Leakage current and treatment

There are two forms of leakage current when using the drive: one is the leakage current to ground; another type is the leakage current between lines.

1) Factors affecting leakage current to ground and solutions:

There is distributed capacitance between the wire and the earth, and the larger the distributed capacitance, the greater the leakage current; effectively reducing the distance between the drive and motor to reduce distributed capacitance. The higher the carrier frequency, the greater the leakage current. The carrier frequency can be reduced to reduce leakage current. However, reducing the carrier frequency can lead to an increase in motor noise. Please note that installing a reactor is also an effective way to solve leakage current.

The leakage current will increase with the increase of circuit current, so when the motor power is high, the corresponding leakage current will be high.

2) Factors causing leakage current between wires and the solution:

There is distributed capacitance between the output wiring of the drive. If the current passing through the lines contains higher harmonic wave, it may cause resonance and generate leakage current. If a thermal relay is used at this time, it may cause it to malfunction.

The solution is to reduce the carrier frequency or install an output reactor. When using the drive, it is recommended not to install a thermal relay between the drive and the motor, and it can use the electronic overcurrent protection function of the drive

Chapter 10 Maintenance and Troubleshooting

10.1 Routine care and maintenance of the drive

10.1.1 Routine maintenance

Due to the influence of temperature, humidity, dust, and vibration in the environment, the internal components of the drive may age, leading to potential failures of the drive or reducing its service life. Therefore, it is necessary to implement routine and regular care and maintenance for the drive.

Routine inspection items:

1) Does the sound of the motor has abnormal change during operation

2) Is there any vibration generated during the operation of the motor

3) Has the installation environment of the drive changed

4) Is the drive cooling fan working properly

5) Routine cleaning:

1) The drive shall always be kept clean.

2) Effectively remove dust accumulation on the surface of the drive to prevent dust from entering the interior of the drive. Especially metal dust.

3) Effectively remove oil stains from the cooling fan of the drive.

10.1.2 Routine cleaning

Please regularly check for areas that are difficult to be checked during operation:

1) Check the air duct and clean it regularly

2) Check whether the screws are loose

3) Check whether the drive is corroded

4) Check whether there are any arc marks on the wiring terminals

5) Main circuit insulation test

Reminder: When measuring insulation resistance with a megohmmeter (please use a DC 500V megohmmeter), the main circuit line shall be disconnected from the drive. Do not use an insulation resistance meter to test the insulation of the control circuit. High voltage test is not necessary (such test has been completed at the factory).

10.1.3 Replacement of drive vulnerable parts

The vulnerable parts of the drive mainly include cooling fans and electrolytic capacitors for filtering, whose service life is closely related to the operating environment and maintenance conditions. The general service life is:

Device Name	Service life (unit)
Fan	2 ~ 3 years
Electrolytic capacitor	4 ~ 5 years

Please calculate the device service life according to the specific use conditions

1: Possible causes of damage to cooling fans: bearing wear and aging of blades. Determination criteria: whether there are cracks in the fan blades, and whether there is any abnormal vibration sound during startup.

2: Possible causes of damage to filter electrolytic capacitors: poor input power quality, high ambient temperature, frequent load jumps, and electrolyte aging. Determination criteria: whether there is liquid leakage, whether the safety valve is protruding, measurement of electrostatic capacitance, and measurement of insulation resistance.

10.1.4 Storage of the drive

After purchasing the drive, users must pay attention to the following points for temporary and long-term storage: try to store the drive in the original packaging box of this Company as much as possible. Long term storage can lead to the deterioration of electrolytic capacitors, and it is necessary to ensure that they are powered on once within 2 years and for at least 5 hours every time. The input voltage must be slowly increased to the rated value with the voltage regulator.

10.2 Warranty statement for the drive

The free warranty only covers the drive itself. In the event of malfunction or damage during normal use, this Company is responsible for warranty for 18 months (from the date of leaving the factory, based on the barcode on the drive body), and reasonable repair fees will be charged after such 18 months;

Within 18 months, if the following situations occur, a certain repair fee shall be charged: machine damage caused by user failure to follow the instructions in the user manual: damage caused by fire, flood, abnormal voltage, etc; Damage caused by using the drive for abnormal functions: The relevant service fees shall be calculated according to the manufacturer's unified

standards (if there is a contract, the principle of contract priority shall be applied).

10.2.1 Fault alarm and countermeasures

If a fault occurs during the operation of the drive system, the drive will immediately protect the motor and stop outputting, while the fault relay contact of the drive will act. The drive panel will display fault code, and the fault types and common solution corresponding to the fault code are detailed in the table below.

The list in the table is for reference only. Please do not repair or modify it without authorization. If the fault cannot be eliminated, please seek technical support from this Company or product agent.

- Fault Information List

Fault name	Operation panel display	Finding out the reason	Troubleshooting
Inverter unit protection	Err01	1. drive output circuit has short circuit 2. wiring of the motor and drive is too long 3. drive internal wiring is loose	1. Troubleshooting peripheral faults 2. add a reactor or output filter 3. plug all the connecting wires
Acceleration overcurrent	Err02	1. drive output circuit has grounding or short circuit 2. the control mode is vector and there is no parameter identification 3. the acceleration time is too short 4. manual torque increase or V / F curve is not appropriate 5. Low voltage 6. Start the rotating motor 7. Sudden load during acceleration 8. Selected drive capacity is small	1. Troubleshooting peripheral faults 2. Conduct motor parameter identification 3. Increase acceleration time 4. Adjust the increased torque or V / F curve 5. Adjust the voltage to the normal range 6. Select the speed tracking start, or wait for the motor to stop and then start. 7. Cancellation of sudden load 8. Select drive with greater power level
Deceleration overcurrent	Err03	1. drive output circuit has grounding or short circuit 2. the control mode is vector and there is no parameter identification 3. deceleration time is too short 4. Low voltage 5. Sudden load during deceleration 6. Not install braking unit and braking resistor	1. Troubleshooting peripheral faults 2. Conduct motor parameter identification 3. Increase the deceleration time 4. Adjust the voltage to the normal range 5. Cancellation of sudden load 6. Installation of braking unit and resistor

Constant speed overcurrent	Err04	1. drive output circuit has grounding or short circuit 2. the control mode is vector and there is no parameter identification 3. low voltage 4. whether there is a sudden load in operation 5. Selected drive capacity is small	1. Troubleshooting peripheral faults 2. Conduct motor parameter identification 3. Adjust the voltage to the normal range 4. Cancellation of sudden load 5. Select drive with greater power level
Acceleration overvoltage	Err05	1. input voltage is high 2. During the acceleration process, there is external force pulling the motor to run 3. acceleration time is too short 4. Not install braking unit and braking resistor	1. Adjust the voltage to the normal range 2. the cancellation of this external power or the installation of braking resistor 3. Increase acceleration time 4. Installation of braking unit and resistor
Deceleration overvoltage	Err06	1. input voltage is high 2. During the deceleration process, there is external force pulling the motor to run 3. deceleration time is too short 4. Not install braking unit and braking resistor	1. Adjust the voltage to the normal range 2. Cancel this external power or install braking resistor 3. Increase the deceleration time 4. Installation of braking unit and resistor
Constant speed overvoltage	Err07	1. input voltage is high 2. During the running process, there is external force pulling the motor to run	1. Adjust the voltage to the normal range 2. the cancellation of this external power or the installation of braking resistor
Control power supply failure	Err08	Input voltage is not within specified range	Adjust the voltage to the specified range

WEIXIU

Fault name	Operation panel display	Finding out the reason	Troubleshooting
Undervoltage fault	Err09	1. Instantaneous power failure 2. drive input end voltage is not in the normal range 3. bus voltage is not normal 4. rectifier bridge and buffer resistor are not normal 5. drive board is abnormal 6. control board is abnormal	1. Reset the fault 2. Adjust the voltage to the normal range 3. Seek technical support 4. Seek technical support 5. Seek technical support 6. Seek technical support
Drive Overload	Err10	1. whether the load is too large or motor stall occurs 2. selected drive capacity is small	1. reduce the load and check the motor and machinery conditions 2. Select the drive with greater power level
Motor overload	Err11	1. whether the load is too large or motor stall occurs 2. selected drive capacity is small	1. reduce the load and check the motor and machinery conditions 2. Select the drive with greater power level
Input phase loss	Err12	1. Three-phase input power is not normal 2. drive board is abnormal 3. Abnormal lightning protection board 4. Abnormal main control board	1. Check and eliminate problems in the peripheral wiring 2. Seek technical support 3. Seek technical support 4. Seek technical support
Output phase loss	Err13	1. the lead from the drive to the motor is not normal 2. The three-phase output of the drive is unbalanced when the motor is running. 3. drive board is abnormal 4. Module is abnormal	1. Troubleshooting the peripheral faults 2. Check whether the motor three-phase winding is normal and troubleshoot the fault 3. Seek technical support 4. Seek technical support
Module overheat	Err14	1. the ambient temperature is too high 2. Air duct blockage 3. Fan damage 4. Module thermistor damage 5. Damage to the inverter module	1. Reduce the ambient temperature 2. Cleaning of air duct 3. Replacement of fan 4. Replacement of thermistor 5. Replacement of inverter module
Failure of external equipment	Err15	1. Input external fault signal through terminal DI 2. Input external fault signal through virtual IO	1. Reset operation 2. Reset operation

Fault name	Operation panel display	Finding out the reason	Troubleshooting
Communication fault	Err16	1. the host computer is not working properly 2. Communication line is not normal 3. Incorrect setting of communication expansion card P0-28 4. Incorrect setting of communication parameter group FD	1. check the host computer wiring 2. Check the communication connection line 3. Correctly set the type of communication expansion card 4. Correctly set communication parameters
Contactor failure	Err17	1. the drive board and power supply are not normal 2. Contactor is not normal	1. Replace the drive board or power board 2. Replacement of contactor
Current detection Fault	Err18	1. Check and find that the Hall device is abnormal 2. drive board is abnormal	1. Replacement of Hall device 2. Replace the drive board
Motor tuning fault	Err19	1. Motor parameters are not set according to the nameplate 2. Parameter identification process timeout	1. According to the nameplate, correctly set the motor parameters 2. check the lead from the drive to the motor
Code disc failure	Err20	1. encoder model mismatches 2. encoder wiring error 3. encoder damage 4. PG Card is abnormal	1. according to the actual situation, correctly set the encoder type 2. Troubleshoot line faults 3. replace the encoder 4. Replacement of PG card
EEPROM read/write failure	Err21	1. EEPROM chip damage	1. replace the main control board
Drive hardware failure	Err22	1. Existence of overvoltage 2. Existence of overcurrent	1. Troubleshoot as overvoltage fault 2. Troubleshoot as overcurrent fault
Short circuit to ground fault	Err23	1. Motor short circuit to ground	1. replace the cable or motor
Cumulative running time arrival failure	Err26	1. Cumulative running time arrives at the set value	1. Use the parameter initialization function to clear the record information
User-defined fault 1	Err27	1. Input the user-defined fault via terminal DI 2. Input the user-defined fault via virtual IO	1. Reset operation 2. Reset operation

Fault name	Operation panel display	Finding out the reason	Troubleshooting
User-defined fault 2	Err28	1. Input the user-defined fault via terminal DI 2. Input the user-defined fault via virtual IO	1. Reset operation 2. Reset operation
Cumulative power-up time arrival fault	Err29	1. Cumulative power-up time arrives at the set value	1. Use the parameter initialization function to clear the record information
No-load fault	Err30	1. drive operating current is less than P9-64	1. Confirm whether the load is detached, or confirm whether parameter settings of P9-64 and F9- 6 5 can meet the actual operating conditions
PID Feedback Loss Fault During Operation	Err31	1. PID feedback is less than the set value of PA-26	1. Check the PID feedback signal or set PA-26 to a suitable value.
Wave-by-wave current limiting fault	Err40	1. Whether the load is too large or motor stall occurs 2. Selected drive capacity is small	1. Reduce load and check motor and mechanical condition 2. Select the drive with higher power level
Power supply cut-off fault during operation	Err41	1. Change the current motor selection via terminals during drive operation	1. Motor switching operation is performed after the drive stops.
Excessive speed deviation fault	Err42	1. Incorrect encoder parameter setting 2. No parameter identification 3. The excessive speed deviation detection parameters P9-69 and P9-70 are set improperly	1. Correctly set the encoder parameters 2. Conduct motor parameter identification 3. According to the actual situation, properly set the detection parameters

Fault name	Operation panel display	Finding out the reason	Troubleshooting
Motor overspeed fault	Err43	1. Incorrect encoder parameter setting 2. No parameter identification 3. The motor overspeed detection parameters P9-67 and P9-68 are set improperly	1. Detect temperature sensor wiring and troubleshoot the fault 2. Reduce carrier frequency or take other heat dissipation measures to cool the motor
Motor over-temperature fault	Err45	1. Temperature sensor wiring is loose 2. Motor temperature is too high	1. Detect temperature sensor wiring 2. Reduce the carrier frequency or strengthen the heat dissipation
Initial position error	Err51	1. The deviation between motor parameters and actual conditions is too large	1. Reconfirm whether the motor parameters are correct, focusing on whether the rated current is set too small.
STO failure	STO1	Abnormal disconnection of the input circuit of STO1. e.g., wiring, power supply, etc.	Detection of STO1 circuit
	STO2	Abnormal disconnection of the input circuit of STO2. e.g., wiring, power supply, etc.	Detection of STO2 circuit

10.2.2 Common faults and troubleshooting

The drive may encounter the following fault conditions during use, please refer to the following methods for simple troubleshooting. Common faults and troubleshooting

No.	Fault symptom	Possible reason	Troubleshooting
1	No display after power up	Grid voltage is absent or too low; Failure of the switching power supply on the drive drive board; damage to the rectifier bridge; The drive buffer resistor is damaged; Failure of control board and keyboard; Broken wires between the control board and the drive board and keyboard;	Check the input power supply; Check busbar voltage; Unplug and plug 8-core and 28-core flat cable; seek service from the manufacturer;
2	Display "500" after power up	Poor contact of the connecting wire between the drive board and the control board; The relevant device on the control board is damaged; Motor or motor wire has short circuit to ground; Hall failure; The grid voltage is too low;	Unplug and plug 8-core and 28-core flat cable; seek service from the manufacturer;
3	Display "Err23" alarm after power up	Motor or output wire has short circuit to ground; The drive is damaged;	Measure the insulation of the motor and output wires with the megger; Seek service from the manufacturer;

4	Drive display normally after power up, it displays "500" after running, and stop immediately	The fan is damaged or has stall; There is a short in the peripheral control terminal wiring;	Replace the fan; Troubleshoot external short circuit fault;
5	Frequent alarm of Err14 (module overheat) fault	The carrier frequency is set too high. Damaged fan or blocked air duct. Damage to internal drive components (thermocouple or other)	Reduce the carrier frequency (P0-15). Replace the fan and clean the air duct. Seek service from the manufacturer.
6	Motor does not rotate after the drive runs	Motor and motor cables; Drive parameter setting error (motor parameters); poor contact of the connecting wire between the drive board and the control board; drive board failure;	Reconfirm the wire between the drive and the motor; Replace the motor or troubleshoot the mechanical fault; Check and reset motor parameters;
7	DI digital input terminal is disabled	The parameters are set incorrectly; External signal error; OP and +24V jumper is loose; Control board failure;	Check and reset the related parameters in Group F4; reconnect external signal cable; reconfirm OP and +24V jumper; seek service from the manufacturer;
8	Motor speed cannot be increased in closed-loop vector control	Encoder failure; The encoder is connected to the wrong wire or has poor contact; PG card failure; drive board failure;	Replace the code disc and reconfirm wiring; replace the PG card; seek services;
9	Frequent overcurrent and overvoltage faults alarms of the drive	The motor parameters are not set correctly; The acceleration and deceleration times are not appropriate; Load fluctuation;	Reset the motor parameters or perform motor tuning; Set the appropriate acceleration and deceleration times; Seek service from the manufacturer;
10	Err17after power up (or in running)	Soft start contactor is not engaged;	Check whether the contactor cable is loose or not; check whether the contactor has a fault or not; check whether the contactor 24V power supply has a fault or not; Seek service from the manufacturer;
11	No display after power up	The relevant device on the control board is damaged;	Replacement of the control board

Appendix I Modbus Communication Protocol

This series of drives provides RS485 communication interface and supports Modbus RTU slave communication protocol. Users can achieve centralized control through computers or PLCs, set drive operation commands through this communication protocol, modify or read function code parameters, and read the working status and fault information of the drive.

1. Protocol Content

This serial communication protocol defines the information content and usage format transmitted in serial communication. This includes: host polling (or broadcasting) format; The encoding method of the host, including the required action function code, data transmission, and error verification. The response of the slave also adopts the same structure, including action confirmation, return data, and error verification. If the slave encounters an error while receiving information or cannot complete the action requested by the host, it will organize a fault message as a response feedback to the host.

1.1 Application methods

The drive is connected to a "single master multi slave" PC/PLC control network with an RDI485 bus as a communication slave.

1.2 Bus structure

- Hardware interface

Need to insert RS485 expansion card EXT485 hardware into the drive

- Topological structure

Single host multi slave system. Each communication device in the network has a unique slave address, with one device serving as the communication host (usually a flat PC host computer, PLC, HMI, etc.), actively initiating communication and performing parameter reading or writing operations on the slave. Other devices are serving as communication slaves, responding to inquiries or communication operations from the host to the local machine. At the same time, only one device can send data, while other devices are in a receiving state.

The setting range of the slave address is 1-247, with 0 being the broadcast communication address. The slave address in the network must be unique.

- Communication transmission method

Asynchronous serial, half duplex transmission method. In the process of serial asynchronous communication, data is sent in the form of a message, one frame at a time. According to the MODBUS-RTU protocol, when the idle time of no data on the communication data line is greater than the transmission time of 3.5 bytes, it indicates the start of a new communication frame.

The communication protocol built into the HV320 series drives is the Modbus RTU slave communication protocol, which can respond to the host's "query/command" or make corresponding actions based on the host's "query/command", and communicate data for responses.

A host can refer to a personal computer (PC), industrial control equipment, or programmable logic controller (PLC), etc. The host can communicate with a specific slave separately and also broadcast information to all subordinate slaves. For individual access to the host's query/command, the accessed slave must return a response frame; For broadcast messages sent by the host, the slave does not need to provide feedback to the host.

The Modbus protocol communication data format for this series of drives is as follows:

Using RTU mode, message sending shall start with a pause interval of at least 3.5 characters. The diverse character times at network baud rates are the easiest to achieve (as shown in T1-T2-T3-T4 in the following figure). The first domain of transmission is the device address.

The transmission characters that can be used are 0.9 in hexadecimal, A.F. Network devices continuously detect network buses, including pause intervals. When the first domain (address domain) receives it, each device decodes it to determine whether it is being sent to itself. After the last transmitted character, a pause of at least 3.5 characters marks the end of the message. A new message can start after this pause.

The entire message frame must be transmitted as a continuous stream. If there is a pause time of more than 1.5 characters before the frame is completed, the receiving device will refresh the incomplete message and assume that the next byte is the address field of a new message. Similarly, if a new message starts with the previous message within less than 3.5 characters, the receiving device will consider it a continuation of the previous message. This will result in an error as the value in the final CRC field cannot be correct.

RTU frame format:

Frame header START	3.5 character time
Slave Address ADR	Correspondence: 1 ~24 7
Command Code CMD	0 3: read slave parameters; 06: write slave parameters
Data content DATA (N- 1)	Data content: function code parameter address, number of function code parameters, function code parameter value, etc.
Data content DATA (N-2)	
.....	
Data content DATA0	
CRC CHK high	Detected value: CRC value.
CRC CHK Low	
END	3.5 character time

CMD (Command Command) and DATA (Data Word Description)

Command code: 03H, read N words (Word) (up to 12 words) e.g.: read 2 consecutive values from the start address P002 of the drive whose slave address is 01.

Host Command Information

ADR	01H
CMD	03H
High starting address	P0H
Start Address Low	02H
Number of registers high	00H
Number of registers low	02H
CRC CHK Low	CRC CHK value to be calculated
CRC CHK high	

When slave response message Pd-05 is set to 0

ADR	01H
CMD	03H
byte count high	00H
low byte count	04H
Data P002H High	00H
Data P002H Low	00H
Data P003H High	00H
Data P003H High	01H
CRC CHK Low	CRC CHK value to be calculated
CRC CHK high	

When Pd-05 is set to 1

ADR	01H
CMD	03H
byte count	04H
Data P002 H High	00H
Data P002 H Low	00H
Data P003 H High	00H
Data P003 H Low	01H
CRC CHK Low	CRC CHK value to be calculated
CRC CHK high	

Command Code: 06H Write a Word Example: Write 5000 (1388H) to the P00AH address of the slave address 02H drive.

Host Command Information

ADR	02H
CMD	06H
Data address high	P0H
data address low level	0AH
Information content high	13H
Profile content low	88H
CRC CHK Low	CRC CHK value to be calculated
CRC CHK High	
ADR	02H
CMD	06H
Data address high	P0H
Data address low level	0AH
Data content high	13H
Data content low	88H
CRC CHK Low	CRC CHK value to be calculated
CRC CHK High	

Verification Method - CRC Verification Method: CRC (Cyclical Redundancy Check) uses RTU frame format, and the message includes an error detection domain based on the CRC method. The CRC domain detects the content of the entire message. The CRC field is two bytes that contain 16 bit binary values. It is calculated by the transmission device and added to the message. The receiving device recalculates the CRC of the received message and compares it with the values in the received CRC field. If the two CRC values are not equal, it indicates a transmission error.

CRC stores 0xFFFF first, and then calls a process to process the consecutive 8-bit bytes in the message with the value in the current register. Only the 8-bit data in each character is valid for CRC, and the start and stop bits, as well as the parity bit, are invalid.

During the CRC generation process, each 8-bit character is individually XOR from the register content, resulting in a shift towards the least significant bit direction and the most significant bit being filled with 0. The LSB is extracted for detection. If the LSB is 1, the register is separate from the preset value. If the LSB is 0, it is not performed. The entire process needs to be repeated 8 times. After the last bit (8th bit) is completed, the next 8-bit byte is separately different from the current value of the register. The value in the final register is the CRC value after all bytes in the message have been executed.

CRC verification program example

```
unsigned int crc_chk_value     (unsigned char *data_value,unsigned char lengTA) {
                                unsigned int crc_value = 0xFFFF;
                                                int i;
while     (lengTA-- )
                                                {
crc_value ^= *data_value++;
for  (i=0;i<8;i++)
                                                {
if  (crc_value&0x0001)    crc_value=
(crc_value>>1  ) ^0xH001;
                                                else
                                        crc_value=crc_value>>1;
                                                }
                                                }
return     (crc_value) ;
                                                }
```

2. Definition of Communication Address

Function code parameter section:

Use the combination of the group number and parameter number of the current communication operation function code as the communication address:

High byte: F0~FF (Group P), A0~AF (Group H), 70~7F (Group U) Low byte: 00~FF

For example: P3-12, the address is represented as F30C; Attention: PF group: parameters cannot be read or changed; U group: can only be read and parameters cannot be changed.

Some parameters cannot be changed while the drive is running; Some parameters cannot be changed regardless of the state of the drive; When changing function code parameters, attention shall also be paid to the range, units, and related instructions of the parameters.

In addition, due to the frequent storage of EEPROMs, their lifespan will be reduced.

Therefore, some function codes do not need to be stored in communication mode, as long as the value in RAM is changed.

If it is an F group parameter, to achieve this function, simply turn the high bit F of the function code address to 0. If it is a parameter of Group A, to achieve this function, simply change the high bit A of the function code address to 4. The corresponding function code address is represented as follows: high byte: 00~0F (Group F), 40~4F (Group A), low byte: 00~FF

For example, the function code P3-12 is not stored in EEPROM, and the address is represented as 030C; Function code H0-05 is not stored in EEPROM, and the address is represented as 4005; This address indicates that it can only perform RAM write operations and cannot perform read operations. It is an invalid address when reading. For all parameters, the command code 07H can also be used to achieve this function.

Shutdown/Operating Parameters:

Parameter address	Parameter description
1000H	*Communication set value (- 10000 ~ 10000) (decimal)
1001H	operating frequency
1002H	busbar voltage
1003H	output voltage
1004H	Output Current
1005H	output power
1006H	Output torque
1007H	running speed
1008H	DI input flag
1009H	DO output flag
100AH	AI1 voltage
100BH	AI2 voltage
100CH	AI3 voltage
100DH	Count Input
100EH	Length value input
100FH	Load speed
1010H	PID Setting
1011H	PID feedback
1012H	PLC Steps
1013H	PULSE input pulse frequency , unit 0 . 01 kHz
1014H	Feedback speed in 0 . 1Hz
1015H	Remaining running time
1016H	AI1 voltage before correction
1017H	AI2 voltage before correction

Note:

The communication setting value is a percentage of the relative value, 10000 corresponds to 100.00%, and -10000 corresponds to -100.00%. For frequency dimensional data, this percentage is the relative percentage of the maximum frequency (P0-10); For the torque dimension data, the percentage is P2-10, H2-48 (the second motor torque upper limit numerical setting).

Control command input to drive: (write only)

Command word address	Command function
2000H	0001: Positive operation
	0002: Reverse run
	0003: Positive rotation point movement
	0004: Reverse point movement
	0005: Freedom to stop
	0006: Deceleration stop
	0007: Fault reset

Read drive status: (read-only)

status word address	status word function
3000H	0001: Positive operation
	0002: Reverse run
	0003: Downtime

Parameter lock password verification: (If the return value is 8888H, it means that the password verification is passed)

Password address	Enter the contents of the password
1P00H	*****
2001H	BIT0: DO1 output control BIT1: DO2 output control BIT2: RELAY1 output control BIT3: RELAY2 output control BIT4: FMR output control BIT5: VDO1 BIT6: VDO2 BIT7: VDO3 BIT8: VDO4 BIT9: VDO5

Analog output AO1 control: (write only)

command address	Order content
2002H	0 ~ 7 FFF indicates 0 % ~ 10 0 %.

Analog output AO2 control: (write only)

command address	Order content
2003H	0 ~ 7 FFF indicates 0 % ~ 10 0 %.

Pulse (PULSE) Output Control: (Write Only)

command address	Order content
2004H	0 ~ 7 FFF indicates 0 % ~ 10 0 %.

Drive Failure Description:

Drive Fault Address	Drive Failure Message	
	0000: No faults	0015: Parameter read/write exception
	0001: Reservations	0016: Drive Hardware Failure
	0002: Accelerated overcurrent	0017: Motor short to ground fault
	0003: Deceleration overcurrent	0018: Reservations
	0004: Constant speed overcurrent	0019: Reservations
	0005: Accelerated overvoltage	001A: Runtime arrival
	0006: Deceleration overvoltage	001B: User-defined fault 1
8000H	0007: Constant speed overvoltage	001C: User-defined faults 2
	0008: Buffer resistor overload fault	001D: Power-up time arrival
	0009: Undervoltage fault	001E: Dropout
	000A: Drive overload	001F: Loss of PID feedback during operation
	000B: Motor overload	0028: Fast current limit timeout fault
	000C: Input out of phase	0029: Switching motor failure during operation
	000D: Output out of phase	002A: Excessive speed deviation
	000E: Module overheating	002B: Motor overspeed
8000H	000F: External fault	002D: Motor over temperature
	0010: Communication anomalies	005A: Encoder line number setting error
	0011: Contactor abnormality	005B: Encoder not connected
	0012: Current Detection Fault	005C: Initial position error
	0013: Motor tuning faults	005E: Speed feedback error
	0014: Encoder/PG card failure	

Group PD Communication Parameter Description

Pd-00	baud	factory value	6005
	setting range	Ones place: MODUBS Baud rate	
		0: 300 BPS 1: 600 BPS 2: 1200BPS 3: 2400 BPS 4: 4800 BPS	5: 9600 BPS 6: 19200 BPS 7: 38400BPS 8: 57600BPS 9: 115200BPS

This parameter is used to set the data transmission rate between the host computer and the drive. Note that the baud rate set by the host computer and the drive must be the same, otherwise the communication cannot be carried out. The higher the baud rate, the faster the communication speed.

Pd-01	data format	factory value	0
	setting range	0: no parity data format <8,N,2> 1: Even parity: data format <8 , E, 1> 2: Odd parity: data format <8 , O, 1> 3: no parity: data format <8-N- 1>	

The data format set by the host computer and the drive must be the same; otherwise, communication cannot be carried out.

Pd-02	local address	factory value	1
	setting range	1~247, 0 is the broadcast address	

When the local address is set to 0, it is the broadcast address, realizing the broadcasting function of the host computer.

The local address has uniqueness (except for the broadcast address), which is the basis for achieving point-to-point communication between the host computer and the drive.

Pd-03	Response delay	factory value	2ms
	setting range	0~20ms	

Response delay: refers to the interval between the end of the drive's data reception and the sending of data to the host computer. If the response delay is less than the system processing time, the response delay is based on the system processing time. If the response delay is longer than the system processing time, the system will delay waiting until the response delay time is reached before sending data to the host computer.

Pd-04	Communication timeout	factory value	0.0 s
	setting range	0.0 s (invalid); 0. 1~60.0s	

When the function code is set to 0.0 s, the communication timeout parameter is invalid.

When the function code is set to a valid value, if the interval between one communication and the next exceeds the communication timeout, the system will report a communication failure error (Err16). Usually, it is set to invalid. If secondary parameters are set in a continuous communication system, communication status can be monitored.

Pd-05	Communication protocol selection	factory value	31
	setting range	Digits: MODBUS 0: Non-standard MODBUS protocols 1: Standard MODBUS protocol 2: Non-standard MODBUS protocol (write commands without replying to the host)	
		Ten positions: ProPibus-DP 0: PFO1 format 1: PFO2 format 2: PFO3 format 3: PFO5 format	

Pd-05=31: Select the standard Modbus protocol.

Pd-05=30: When reading a command, the number of bytes returned by the slave is one more byte than the standard Modbus protocol. Please refer to the "5 Communication Data Structure" in this Protocol for details.

Pd-06	Communication reads current resolution	factory value	0
	setting range	0: 0.01A; 1: 0.1A	

Used to determine the output unit of the current value when the communication reads the output current.

Appendix II Constant Pressure Water Supply Application Macros

1. Wiring Schematic Diagram

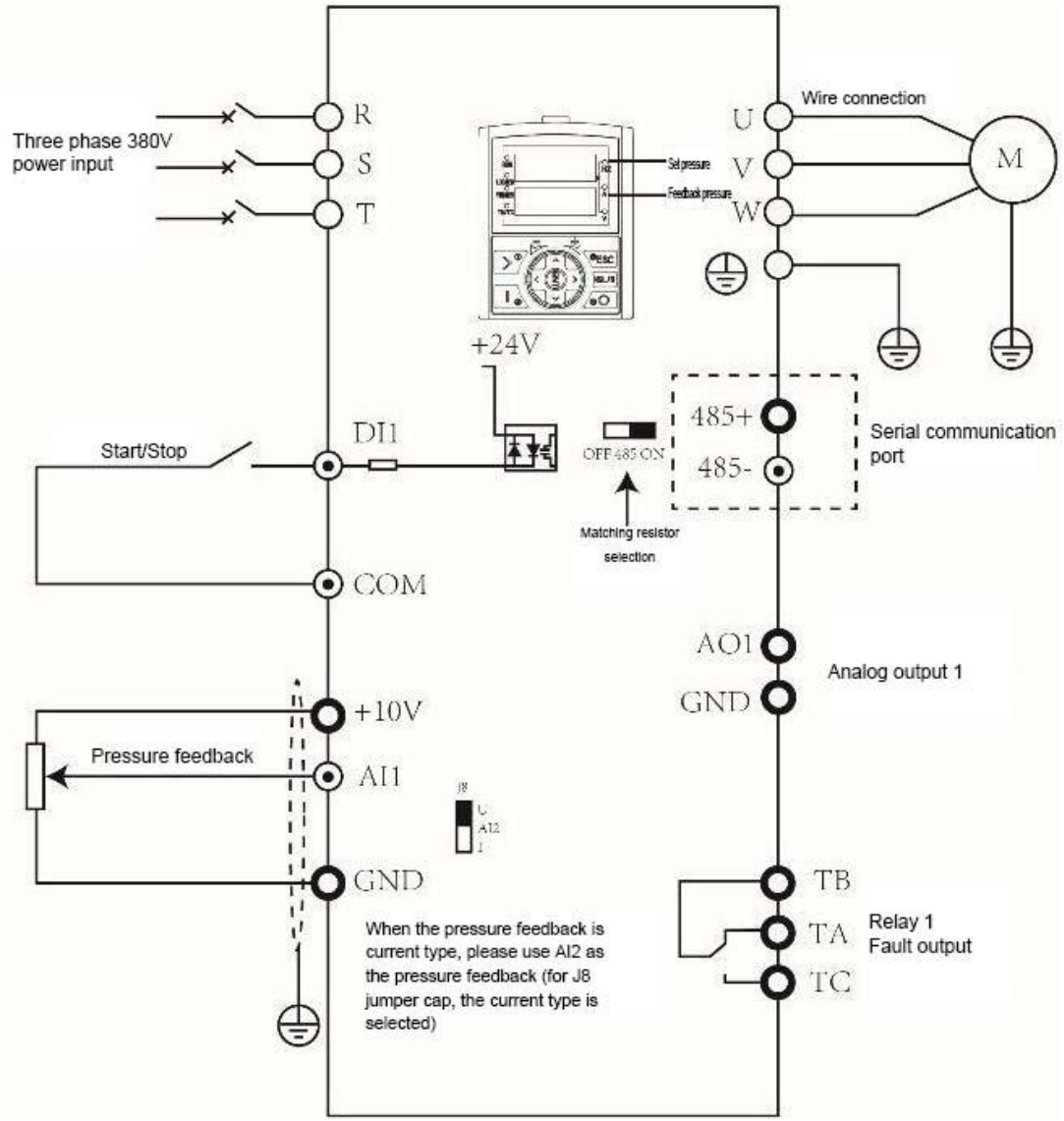

Fig. 1 Wiring diagram of pressure feedback as voltage type

2. Parameter setting instructions, connect the wires according to the above diagram before setting the parameters

2.1 Application macro, set L0-00=1, and the factory values of the following parameters will be automatically updated; if the pressure feedback is AI1, start or stop running can be conducted at this time; if the pressure is current type AI2, please set the parameters as described in 2.2

2.2 The voltage feedback adopts AI2 and the feedback is current type, otherwise there is no need to set it

Function code	Function	Range	Factory value
P0-02	command source	0 to 2	1 (terminal)
P0-03	frequency source	0 to 9	8 (PID)
P0-17	Acceleration time 1	0.0s to 6500.0s (P0-19=1)	10.0s
P0-18	Deceleration time 1	0.0s～6500.0s	10.0s
PA-00	PID given source	0 to 7	7 (Up/Down)
PA-01	PID value given	0.0% to 100.0%	5.00kg
PA-04	PID range	10～10000, 1MPa=10kg	10.00kg
PA-05	Proportional gain Kp1	0.0 to 100.0	50.0
PA-06	Integration time Ti1	0.01s～10.00s	1.00s
PA-14	Pressure Setting and Feedback Decimal Place(s)	1:1 bit 2: 2 bits	1
PA-28	PID stopping operation	0: no calculation during shutdown, 1: calculation during shutdown	1
H9-00	Sleep selection	0: Sleep function is invalid, 1: Sleep function is controlled by PID set value and feedback value. 2: Control of sleep function according to operating frequency	1
P4-18	Analog Input Curve 2 Minimum Input	2.00V to P4-20	2.00V
PA-02	PID Feedback Source	0: ai1, 1: ai2, 2: ai3. 3: AI1-AI2, 4: PULSE pulse setting (S5) 5: communication given, 6: V1+V2. 7: MAX (|V1|, |V2|) , 8: MIN (|V1|, |V2|)	1

Note: AI2 is 4～20mA input

2.3 Common parameters, which generally do not require adjustment

Function code	Function	Range	Factory value
P0-02	command source	0: Operator panel command channel (LED off) 1: Terminal command channel (LED on) 2: Communication command channel (LED blinking)	1 (terminal)
P0-03	frequency source	0: Digital setting (preset frequency P0-08, UP/DOWN can be modified, no memory for power down) 1: Digital setting (preset frequency P0-08, UP/DOWN can be modified, power-down memory) 2: V1, 3: V2, 4: V3, 5: PULSE pulse setting (S5) 6: Multi-segment instruction, 7: Simple PLC, 8: PID, 9: Communication	8 (PID)
P0-09	running direction	0: same direction, 1: opposite direction	0
P0-10	Maximum frequency	50.00Hz～3200.0Hz	50.00
P0-17	Acceleration time 1	0.0s to 6500.0s (P0-19=1)	10.0s
P0-18	Deceleration time 1	0.0s～6500.0s	10.0s
P1-01	Motor rated power	0.1kW～1000.0kW	Determination of model
P1-02	Motor rated voltage	1V to 2000V	Determination of model
P1-03	Motor rated current	0.01A～655.35A (Inverter power <=55kW) 0.1A～6553.5A (Inverter power >55kW)	Determination of model
P1-04	Motor rated frequency	0.01Hz to maximum frequency	P1-04
P1-05	Rated motor speed	1rpm～65535rpm	P1-05
P1-01	Motor rated power	0.1kW～1000.0kW	P1-01
P1-02	Motor rated voltage	1V to 2000V	P1-02
PA-00	PID given source	0: PA-01 setting, 1: AI1, 2: AI. 3: AI3, 4: PULSE pulse setting (S5). 5: communication given, 6:	PA-00

		multi-segment command given, and 7:Up/Down or digital setting	
PA-01	PID value given	0.0% to 100.0%	50.0%
PA-02	PID Feedback Source	0: ai1, 1: ai2, 2: ai3. 3: AI1-AI2, 4: PULSE pulse setting (S5) 5: communication given, 6: AI1+AI2. 7 : MAX (|AI1|, |AI2|), 8 : MIN (|AI1|, |AI2|)	0
PA-03	Direction of PID action	0: positive effect, 1: negative effect	0
PA-04	PID range	0 to 65535	1000
PA-05	Proportional gain Kp1	0.0 to 100.0	50.0
PA-06	Integration time Ti1	0.01s～10.00s	2.00s
PA-14	Pressure setting and feedback decimal place(s)	1:1 bit 2: 2 bits	50.0%
PA-28	PID stopping operation	0: no calculation during shutdown, 1: calculation during shutdown	1
H9-00	Sleep selection	0: Sleep function is invalid, 1: Sleep function is controlled by PID set value and feedback value. 2: Control of sleep function according to operating frequency	1
H9-01	Sleeping frequency	0.00Hz to P0-10	30.00 Hz
H9-02	sleep delay	0.0s～3600.0s	20.0s
H9-03	wake-up call difference	0.0% to 100.0%	3.0%
H9-04	wake-up delay	0.0s～3600.0s	0.5s
H9-05	Sleep delay frequency output selection	0: PID auto-tuning, 1: Dormant frequency H9-01	0

3. Application case

3.1 Single pump operation mode, pressure transmitter whose pressure feedback type is current type:

3.2 The wiring is shown in Figure 2:

3.3 Parameter setting

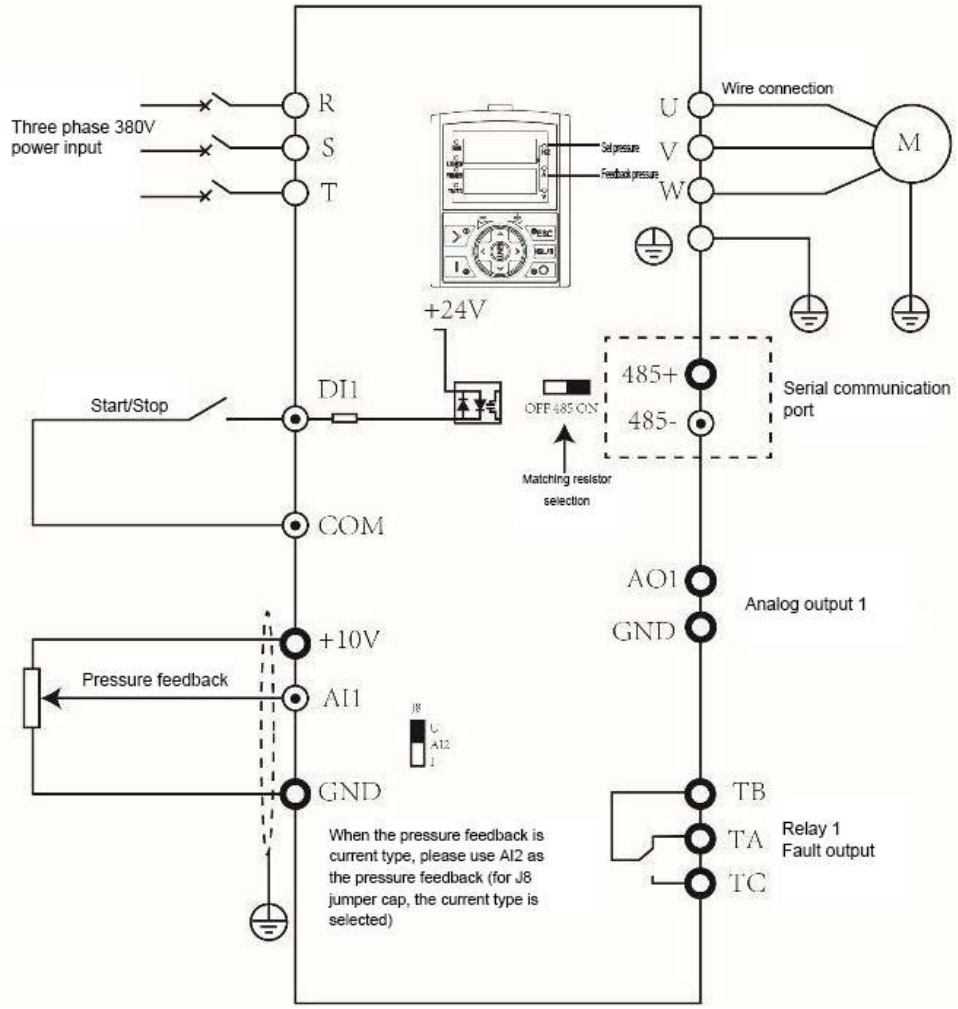

Take 10Kg range meter, target pressure of 5.0Kg, sleep at the sleep frequency, waking up at 4.5Kg as an example.

1) Application macro setting, L0-00=1

2) Motor power setting, P1-01

3) Pressure feedback source and range setting, with the keyboard, set the pressure to 5.0kg via up/down

Function code	Function	Range	Factory value
P4-18	Analog Input Curve 2 Minimum Input	2.00V to P4-20	2.00V
PA-02	PID Feedback Source	0: ai1, 1: ai2, 2: ai3. 3: AI1-AI2, 4: PULSE pulse setting (S5) 5: communication given, 6: AI1+AI2. 7 : MAX (|AI1|, |AI2|), 8 : MIN (|AI1|, |AI2|)	1
PA-04	PID range	10～10000, 1MPa=10kg	10.00kg

4) Sleep parameter setting

Function code	Function	Range	Factory value
H9-00	Sleep selection	0: Sleep function is invalid 1: Sleep function is controlled by PID set value and feedback value. 2:Controlling the sleep function according to the operating frequency	1
H9-03	Wake-up difference	0.0% to 100.0%	5.0%

Note: Wake-up difference H9-03= (5.0-4.5)/10*100%=5%

Warranty Agreement

1. The warranty period of this product is eighteen months (based on the bar code information on the drive body). During the warranty period, if the product malfunctions or is damaged during normal use according to the user manual, this Company is responsible for free repair.

2. During the warranty period, if damage is caused by the following reasons, a certain repair fee will be charged:

A. Machine damage caused by usage errors and unauthorized repairs or modifications

B. Machine damage caused by fires, floods, abnormal voltage, other natural disasters, and secondary disasters

C. Hardware damage caused by falling by person and transportation after purchase;

D. Machine damage caused by operation not following the user manual provided by this Company;

E. Malfunctions and damages caused by obstacles outside the machine (such as external equipment factors)

3. When the product malfunctions or is damaged, please fill out the various contents in the Product Warranty Card correctly and in detail.

4. The collection of repair fees shall be based on this Company's latest adjusted Repair Price List.

5. Under normal circumstances, this warranty card will not be reissued. Please make sure to keep this card and present it to the repair personnel while the warranty service is provided.

6. If there are any problems during the service process, please contact our agent or this Company in a timely manner.

Product Warranty Card

<table>
<tr><td rowspan="3">Customer Information</td><td colspan="2">Unit Address:</td></tr>
<tr><td rowspan="2">Unit Name:

Postcode:</td><td>Contact Person:</td></tr>
<tr><td>Contact telephone:</td></tr>
<tr><td rowspan="3">Product Information</td><td colspan="2">Product Model:</td></tr>
<tr><td colspan="2">Barcode on the drive body (paste here):</td></tr>
<tr><td colspan="2">Agent Name:</td></tr>
<tr><td>Failure Information</td><td colspan="2">(repair time and item):

Repair personnel:</td></tr>
</table>

Edition: V2.7

Thanks for choosing HNC product.

Any technique support, please feel free to contact our support team

Tel: 86(20)84898493 Fax: 86(20)61082610

URL: www.hncelectric.com

Email:support@hncelectric.com